US 20200076479A1

(19) United States

(12) Patent Application Publication

(10) Pub. No.: US 2020/0076479 A1

(43) Pub. Date: Mar. 5, 2020

Rodríguez-Cano et al.

(54) **INTEGRATED END-FIRE MM-WAVE ANTENNA ARRAY WITH LOW FREQUENCY METAL-FRAMED ANTENNA**

(71) Applicant: **wiSpry, Inc.**, Irvine, CA (US)

(72) Inventors: **Rocío Rodríguez-Cano**, Aalborg (DK); **Shuai Zhang**, Aalborg SV (DK); **Gert Frølund Pedersen**, Storvorde (DK)

(21) Appl. No.: **16/557,543**

(22) Filed: **Aug. 30, 2019**

Related U.S. Application Data

(60) Provisional application No. 62/725,740, filed on Aug. 31, 2018.

Publication Classification

(51) **Int. Cl.**

H04B 7/0426	(2006.01)
H01Q 21/29	(2006.01)
H04B 7/06	(2006.01)
H01Q 7/00	(2006.01)
H01Q 1/36	(2006.01)
H01Q 5/392	(2006.01)
H01Q 1/24	(2006.01)

(52) **U.S. Cl.**

CPC ***H04B 7/043*** (2013.01); ***H01Q 21/293*** (2013.01); ***H04B 7/0617*** (2013.01); ***H01Q 1/246*** (2013.01); ***H01Q 1/36*** (2013.01); ***H01Q 5/392*** (2015.01); ***H01Q 7/00*** (2013.01)

(57) **ABSTRACT**

The present subject matter relates to antenna systems, devices, and methods that are designed to avoid the degradation of the end-fire radiation pattern of the array when a piece of metal is added obstructing the direction of the main beam. A parasitic radiator is positioned in proximity to the blocking structure and configured to couple at least part of the reflected radiation pattern and radiate toward the desired end-fire direction.

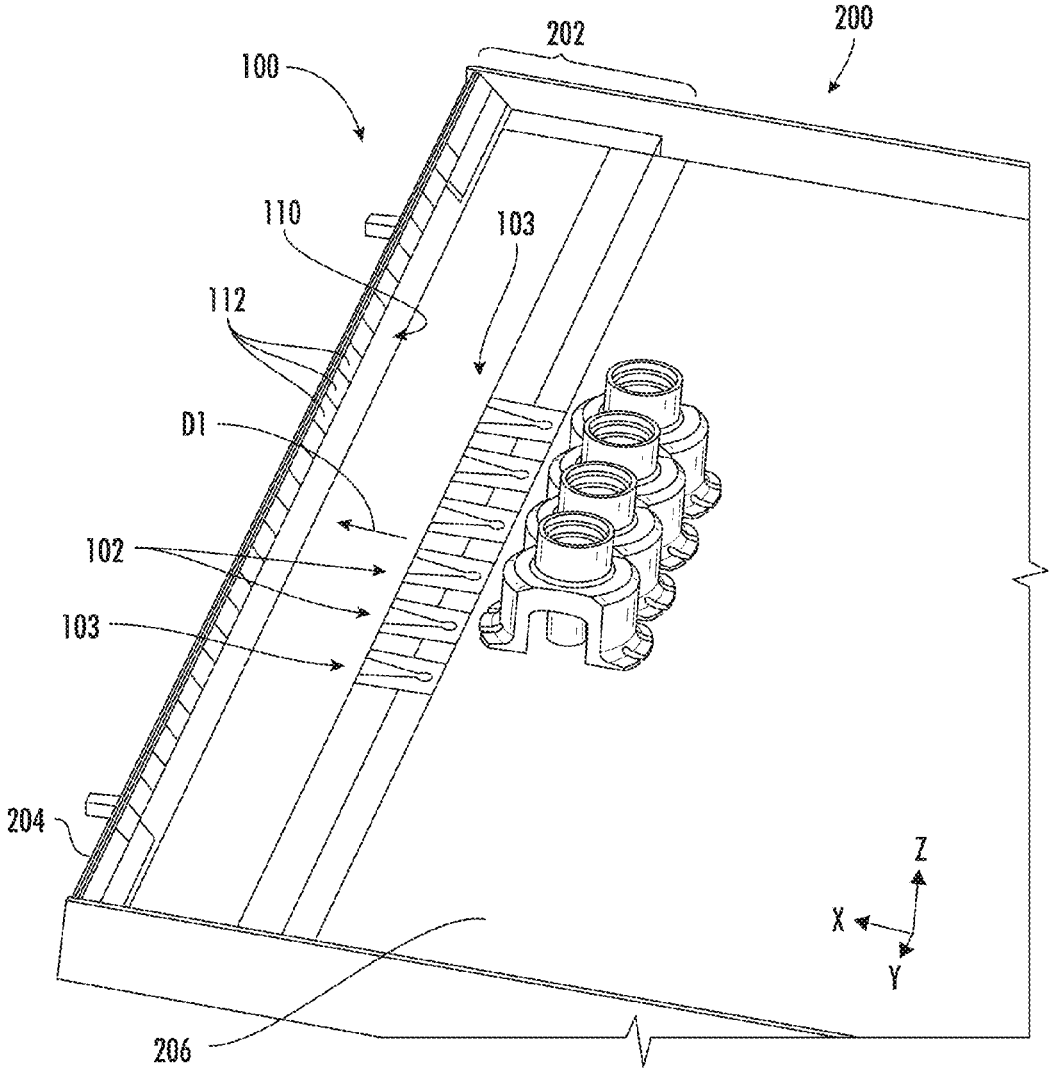

US 20200058981A1

(19) United States

(12) Patent Application Publication

CHANG et al.

(10) Pub. No.: US 2020/0058981 A1

(43) Pub. Date: Feb. 20, 2020

(54) **ANTENNA STRUCTURE**

(71) Applicant: **Chiun Mai Communication Systems, Inc.**, New Taipei (TW)

(72) Inventors: **YUN-JIAN CHANG**, New Taipei (TW); **JUNG-CHIN LIN**, New Taipei (TW); **YEN-HUI LIN**, New Taipei (TW)

(21) Appl. No.: **16/542,430**

(22) Filed: **Aug. 16, 2019**

(30) **Foreign Application Priority Data**

Aug. 17, 2018 (CN) 201810942117.X

Publication Classification

(51) **Int. Cl.**

H01Q 1/24	(2006.01)
H01Q 5/30	(2006.01)
H01Q 1/48	(2006.01)

(52) **U.S. Cl.**

CPC ***H01Q 1/24*** (2013.01); ***H01Q 1/48*** (2013.01); ***H01Q 5/30*** (2015.01)

(57) **ABSTRACT**

An antenna structure includes a border frame, a first feed portion, and a second feed portion. The border frame includes an end portion, a first side portion, and a second side portion. The border frame defines a first gap, a second gap, a first slot, and a second slot. The first gap and the second gap are disposed in the end portion. The first slot is disposed in the first side portion. The second slot is disposed in the second side portion. The first gap, the second gap, the first slot, and the second slot divide the border frame into two radiating portions. The first feed portion and the second feed portion are electrically coupled to the two radiating portions and supply current to the two radiating portions respectively.

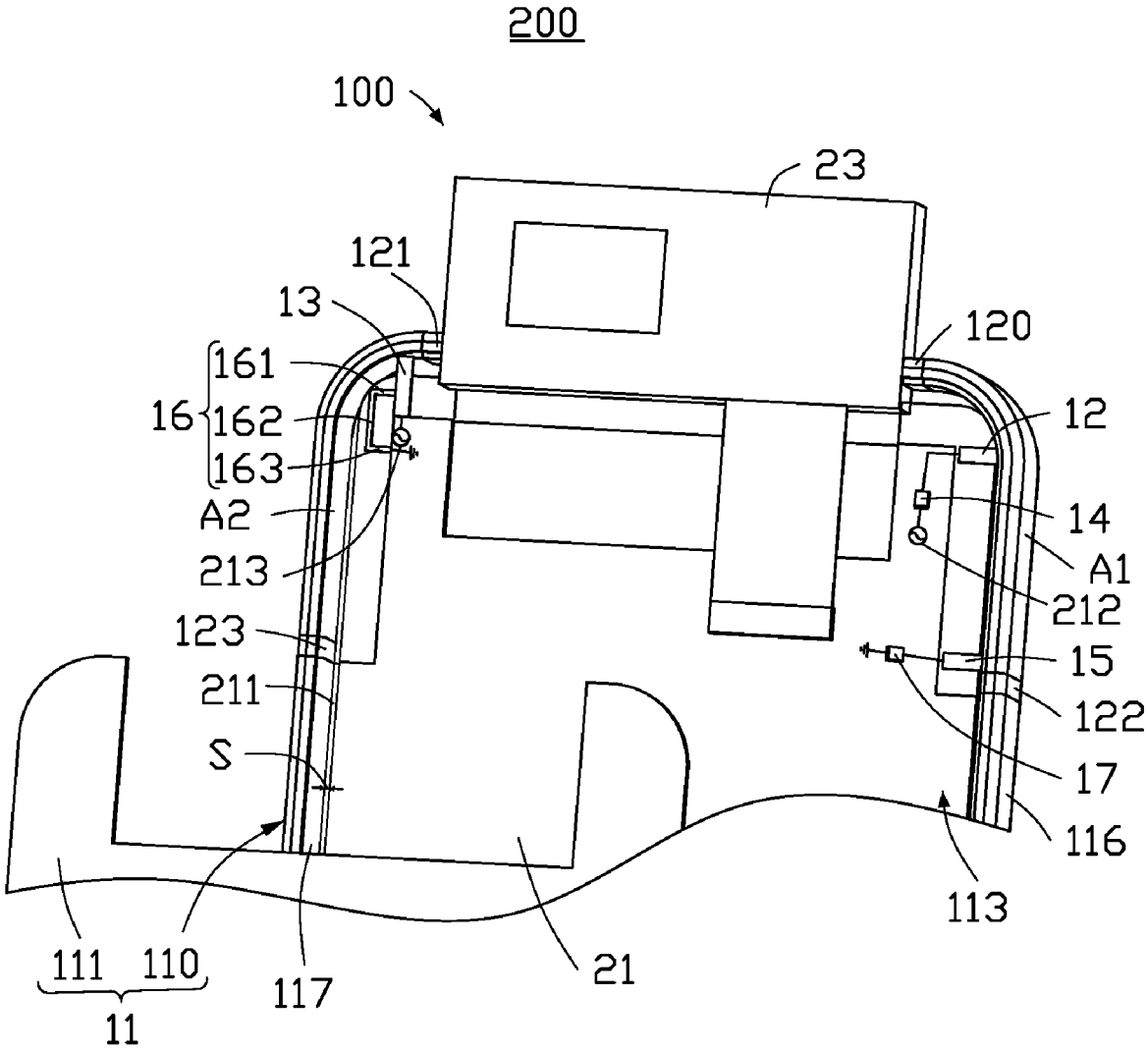

US 20200058984A1

(19) United States

(12) Patent Application Publication

(10) Pub. No.: US 2020/0058984 A1

(43) Pub. Date: Feb. 20, 2020

Qiu et al.

(54) **ANTENNA MODULE AND MOBILE TERMINAL**

(71) Applicant: **AAC Technologies Pte. Ltd.**, Singapore City (SG)

(72) Inventors: **Xiaojun Qiu**, Shenzhen (CN); **Bo Zhu**, Shenzhen (CN)

(21) Appl. No.: **16/525,590**

(22) Filed: **Jul. 30, 2019**

(30) **Foreign Application Priority Data**

Aug. 20, 2018 (CN) 201810947841.1

Publication Classification

(51) **Int. Cl.**

H01Q 1/24	(2006.01)
H01Q 1/50	(2006.01)
H01Q 5/328	(2006.01)

(52) **U.S. Cl.**

CPC ***H01Q 1/243*** (2013.01); ***H01Q 5/328*** (2015.01); ***H01Q 1/50*** (2013.01)

(57) **ABSTRACT**

An antenna module includes a first antenna and a second antenna. The first antenna forms multiple operating states. By switching the multiple operating states, the first antenna supports an LTE low frequency of 698-960 MHz and an LTE medium-high frequency of 1710-2690 MHz, and supports multi-carrier aggregation in the band. In each operating state, the first antenna also operates in 5G bands of 3300-3800 MHz and 4800-5000 MHz, the second antenna operates in 5G bands of 3300-3800 MHz and 4800-5000 MHz and a new TDD-LTE band of 5150-5925 MHz. The first antenna and the second antenna together form a 2×2 MIMO of 5G bands of 3300-3800 MHz and 4800-5000 MHz. The antenna module provided by the disclosure has better communication performance.

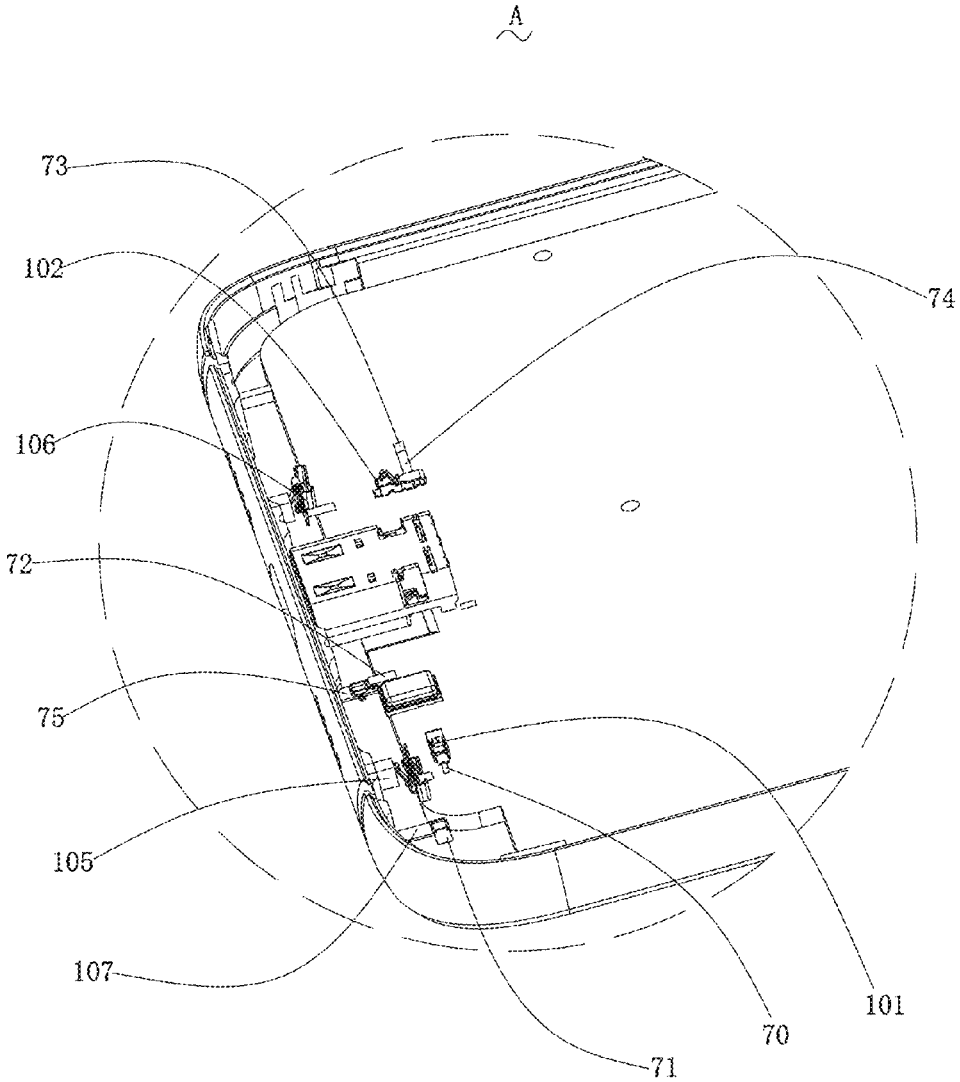

US 20200058992A1

(19) United States
(12) Patent Application Publication
Wu et al.
(10) Pub. No.: US 2020/0058992 A1
(43) Pub. Date: Feb. 20, 2020

(54) **COMMUNICATIONS TERMINAL**

(71) Applicant: **Huawei Technologies Co., Ltd.**, Shenzhen (CN)

(72) Inventors: **Pengfei Wu**, Shanghai (CN); **Dong Yu**, Shanghai (CN); **Chien-Ming Lee**, Shanghai (CN)

(21) Appl. No.: **16/461,561**

(22) PCT Filed: **Nov. 17, 2016**

(86) PCT No.: **PCT/CN2016/106269**

§ 371 (c)(1),
(2) Date: **May 16, 2019**

Publication Classification

(51) **Int. Cl.**

H01Q 1/52	(2006.01)
H01Q 1/48	(2006.01)
H01Q 21/00	(2006.01)
H01Q 1/24	(2006.01)

(52) **U.S. Cl.**
CPC ***H01Q 1/523*** (2013.01); ***H01Q 1/243*** (2013.01); ***H01Q 21/0025*** (2013.01); ***H01Q 1/48*** (2013.01)

(57) **ABSTRACT**

A communications terminal includes a multiple-input multiple-output antenna system. The multiple-input multiple-output antenna system includes a first antenna module, a second antenna module, and a first ground structure. The first antenna module includes a first radiator configured to form a first MIMO antenna and a second radiator configured to form a GPS antenna, and a first slit is provided between the first radiator and the second radiator. The second antenna module includes a third radiator configured to form a low frequency antenna and a fourth radiator configured to form a second MIMO antenna. The second radiator is connected to the third radiator. One end of the first ground structure is connected to the second radiator or the third radiator, and another end is connected to a ground plane of the communications terminal.

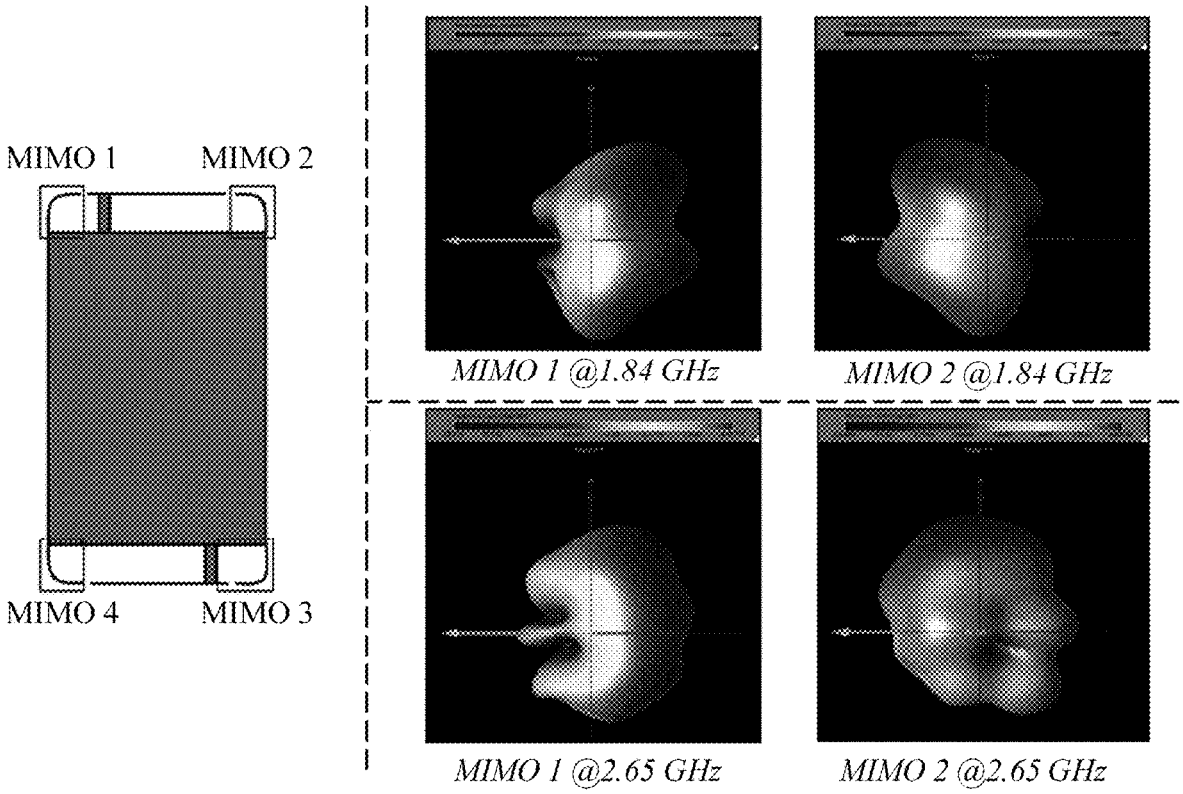

US 20200058993A1

(19) United States

(12) Patent Application Publication

(10) Pub. No.: US 2020/0058993 A1

(43) Pub. Date: Feb. 20, 2020

Qiu

(54) **ANTENNA MODULE AND MOBILE TERMINAL**

(71) Applicant: **AAC Technologies Pte. Ltd.**, Singapore city (SG)

(72) Inventor: **Xiaojun Qiu**, Shenzhen (CN)

(21) Appl. No.: **16/524,074**

(22) Filed: **Jul. 28, 2019**

(30) **Foreign Application Priority Data**

Aug. 20, 2018 (CN) 201810946067.2

Publication Classification

(51) **Int. Cl.**

H01Q 1/52 (2006.01)
H01Q 1/24 (2006.01)
H01Q 5/30 (2006.01)
H01Q 5/20 (2006.01)

(52) **U.S. Cl.**

CPC ***H01Q 1/523*** (2013.01); ***H01Q 5/20*** (2015.01); ***H01Q 5/30*** (2015.01); ***H01Q 1/243*** (2013.01)

(57) **ABSTRACT**

An antenna module including a first antenna and a second antenna close to the first antenna. The second antenna includes an isolation circuit and a second tuning switch controlling an access state of the isolation circuit. The second tuning switch includes two modes. When the second tuning switch is in a first mode, the isolation circuit accesses to a feeding network of the second antenna. When the second tuning switch is in a second mode, the isolation circuit does not access to the feeding network of the second antenna. Isolation of the first antenna and the second antenna in a preset band in the first mode is superior to that in the second mode.

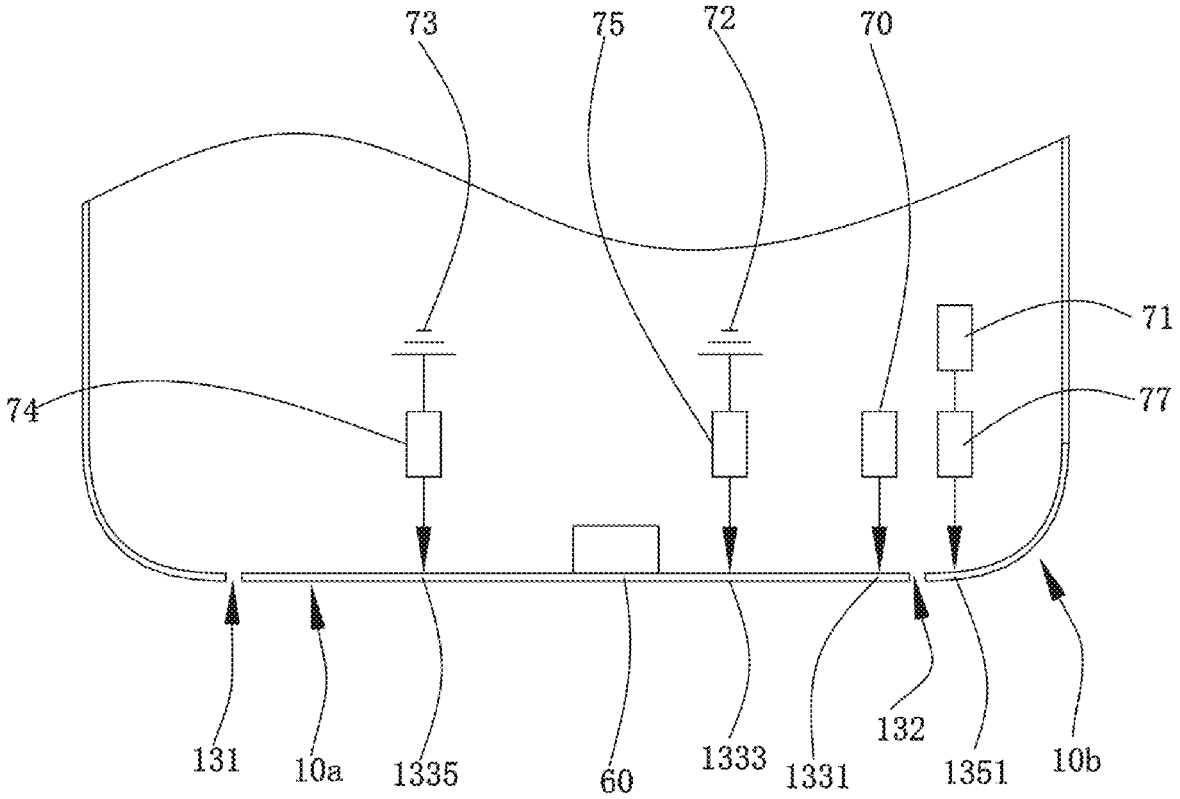

US 20200059006A1

(19) United States

(12) Patent Application Publication

KOJIMA

(10) Pub. No.: US 2020/0059006 A1

(43) Pub. Date: Feb. 20, 2020

(54) **ANTENNA APPARATUS AND MOBILE TERMINAL**

(71) Applicant: **Suguru KOJIMA**, Kanagawa (JP)

(72) Inventor: **Suguru KOJIMA**, Kanagawa (JP)

(21) Appl. No.: **16/664,963**

(22) Filed: **Oct. 28, 2019**

Related U.S. Application Data

(63) Continuation of application No. PCT/JP2017/017034, filed on Apr. 28, 2017.

Publication Classification

(51) **Int. Cl.**

H01Q 19/00 (2006.01)

H01Q 9/04 (2006.01)

(52) **U.S. Cl.**

CPC ***H01Q 19/005*** (2013.01); ***H01Q 9/045*** (2013.01)

(57) **ABSTRACT**

An antenna apparatus having directivity includes an antenna portion having a power feeding portion, a plate-like first antenna element, and a second antenna element connected to a side of the first antenna element through the power feeding portion, the second antenna element having a width smaller than that of the first antenna element; and a plate-like parasitic element disposed opposite to the antenna portion. The parasitic element has a length that is approximately one-half or more of a wavelength of an operating frequency. The second antenna element has a length that is shorter than one-fourth of the wavelength of the operating frequency. The antenna portion and the parasitic element have a distance capable of being connected electromagnetically to each other.

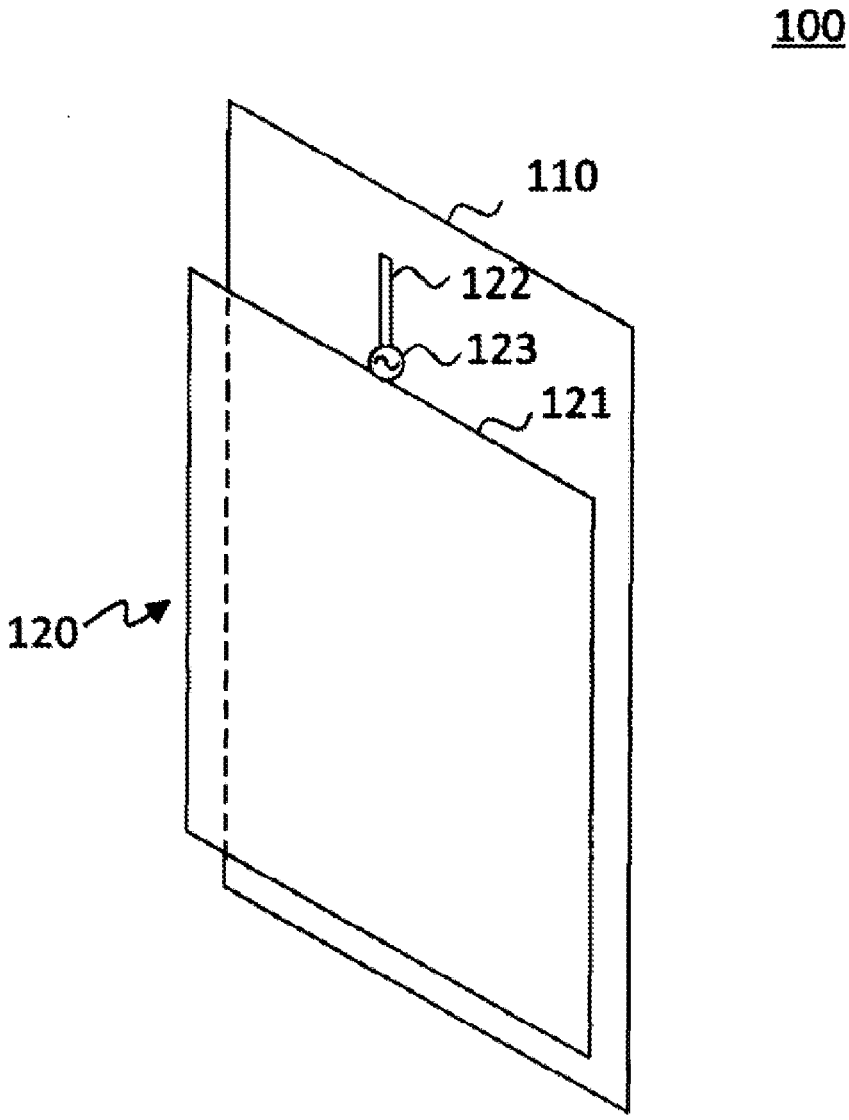

US 20200067172A1

(19) United States

(12) Patent Application Publication

PARK

(10) Pub. No.: US 2020/0067172 A1

(43) Pub. Date: Feb. 27, 2020

(54) **ANTENNA ASSEMBLY COMPRISING ANTENNAS FORMED ON INCLINED SIDE SURFACE OF PRINTED CIRCUIT BOARD AND ELECTRONIC DEVICE COMPRISING THE SAME**

(71) Applicant: **Samsung Electronics Co., Ltd.**, Suwon-si (KR)

(72) Inventor: **Sungchul PARK**, Suwon-si (KR)

(21) Appl. No.: **16/547,874**

(22) Filed: **Aug. 22, 2019**

(30) **Foreign Application Priority Data**

Aug. 24, 2018 (KR) 10-2018-0099375

Publication Classification

(51) **Int. Cl.**

H01Q 1/22 (2006.01)

H01Q 15/14 (2006.01)

(52) **U.S. Cl.**

CPC ***H01Q 1/2283*** (2013.01); *H01Q 1/243* (2013.01); ***H01Q 15/14*** (2013.01)

(57) **ABSTRACT**

An inclined antenna assembly and an electronic device including the antenna assembly are provided. The inclined antenna assembly and an electronic device include a communication circuit and a Printed Circuit Board (PCB) including a front face, a back face on which the communication circuit is disposed, and at least one side face having an inclined manner between the front face and the back face. According to various embodiments, the PCB may include one or more antennas formed on a region corresponding to at least one side face.

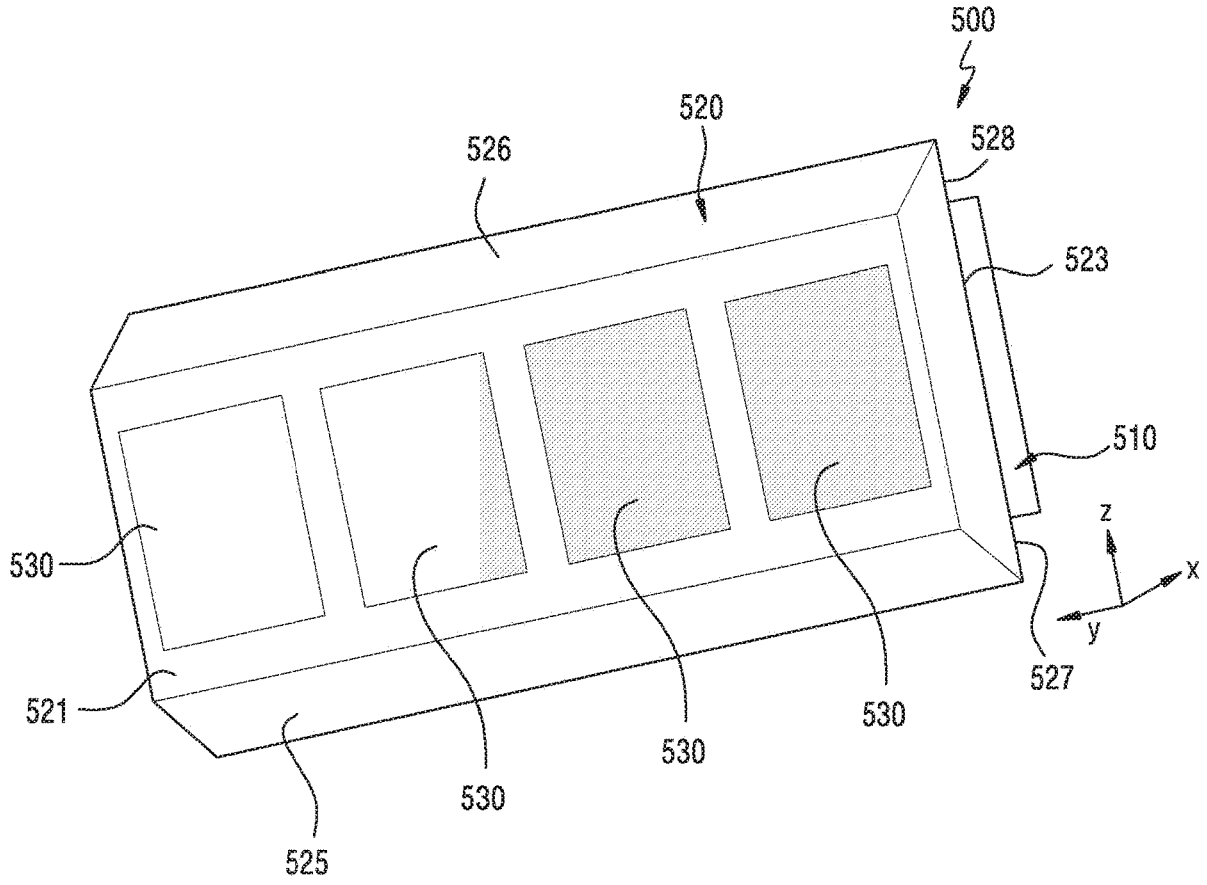

US 20200067189A1

(19) United States

(12) Patent Application Publication

(10) Pub. No.: US 2020/0067189 A1

(43) Pub. Date: Feb. 27, 2020

Wang et al.

(54) **COMPOSITE RIGHT/LEFT-HANDED TRANSMISSION LINE ANTENNA**

(71) Applicant: **Huawei Technologies Co., Ltd.**, Shenzhen (CN)

(72) Inventors: **Lei Wang**, Shanghai (CN); **Meng Hou**, Shanghai (CN); **Xuefei Zhang**, Shenzhen (CN); **Jianming Li**, Shanghai (CN); **Hanyang Wang**, Reading (GB)

(21) Appl. No.: **16/654,768**

(22) Filed: **Oct. 16, 2019**

Related U.S. Application Data

(63) Continuation of application No. 15/508,348, filed on Mar. 2, 2017, now Pat. No. 10,483,642, filed as application No. PCT/CN2014/085835 on Sep. 3, 2014.

Publication Classification

(51) **Int. Cl.**

H01Q 5/335	(2006.01)
H01Q 13/08	(2006.01)
H01Q 9/42	(2006.01)
H01Q 13/10	(2006.01)
H01Q 1/24	(2006.01)

(52) **U.S. Cl.**

CPC ***H01Q 5/335*** (2015.01); ***H01Q 13/08*** (2013.01); ***H01Q 1/243*** (2013.01); ***H01Q 13/10*** (2013.01); ***H01Q 9/42*** (2013.01)

(57) **ABSTRACT**

A composite right/left-handed transmission line antenna includes a first radiator, a second radiator, and a capacitive matching circuit, where the first radiator is connected to the second radiator, the connected first radiator and second radiator are of a ring shape, and the matching circuit is connected to a feed-in point of the first radiator or the second radiator.

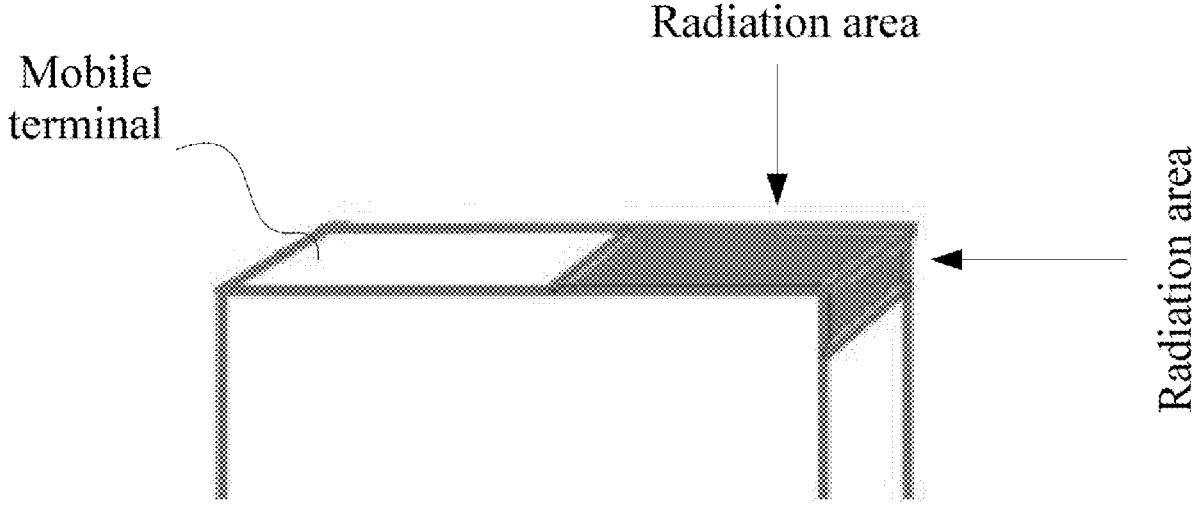

US 20200067539A1

(19) United States

(12) Patent Application Publication

Park et al.

(10) Pub. No.: US 2020/0067539 A1

(43) Pub. Date: Feb. 27, 2020

(54) ELECTRONIC DEVICE INCLUDING CIRCUIT CHANGING FEED PATH

(71) Applicant: **Samsung Electronics Co., Ltd.**, Gyeonggi-do (KR)

(72) Inventors: **Jeongwan Park**, Gyeonggi-do (KR); **Seho Kim**, Gyeonggi-do (KR); **Min Sakong**, Gyeonggi-do (KR); **Moonsoo Son**, Gyeonggi-do (KR); **Dongryul Shin**, Gyeonggi-do (KR); **Sooyoung Jang**, Gyeonggi-do (KR); **Yoonjae Lee**, Gyeonggi-do (KR)

(21) Appl. No.: **16/552,329**

(22) Filed: **Aug. 27, 2019**

(30) **Foreign Application Priority Data**

Aug. 27, 2018 (KR) 10-2018-0100429

Publication Classification

(51) **Int. Cl.**

H04B 1/00 (2006.01)

H04B 1/40 (2006.01)

(52) **U.S. Cl.**

CPC ***H04B 1/0064*** (2013.01); *H01Q 1/243* (2013.01); ***H04B 1/40*** (2013.01)

(57) **ABSTRACT**

An electronic device is provided that includes a first antenna element that includes a first portion of a housing, and a second antenna element that include a second portion of the housing that is different from the first portion of the housing. The electronic device also includes a memory that stores feed conditions, each for applying a current to one of the first antenna element and the second antenna element. A tuner of the electronic device is controlled such that a first current flows to one of the first antenna element and the second antenna element, based on a first feed condition of the stored feed conditions, and a processor of the electronic device transmits or receives a signal in a specified frequency band based on an electrical path formed through the tuner.

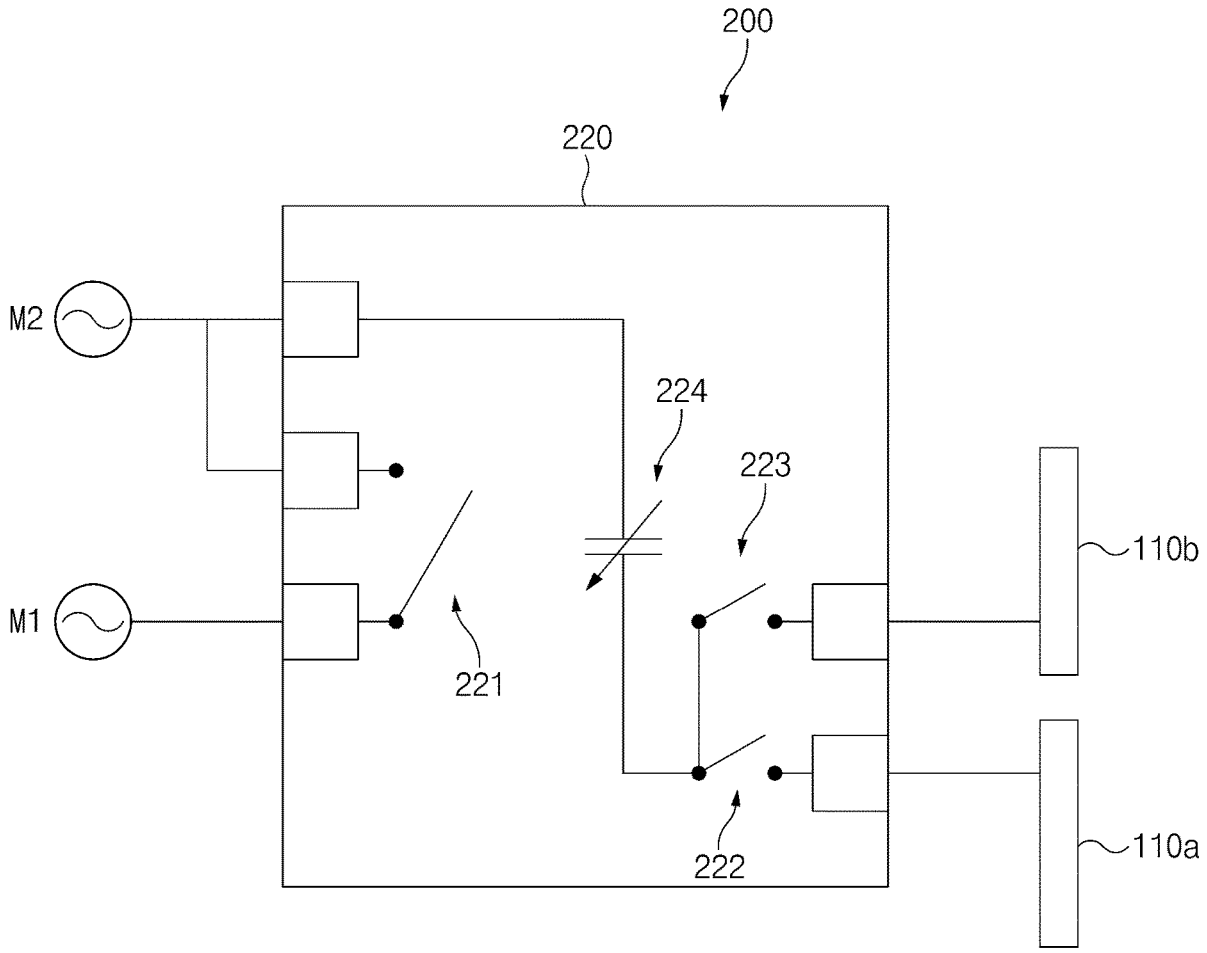

US 20200068054A1

(19) United States
(12) Patent Application Publication
KIM et al.
(10) Pub. No.: US 2020/0068054 A1
(43) Pub. Date: Feb. 27, 2020

(54) **ELECTRONIC DEVICE WITH METAL FRAME ANTENNA**

(71) Applicant: **Samsung Electronics Co., Ltd.**, Gyeonggi-do (KR)

(72) Inventors: **Jaehyung KIM**, Gyeonggi-do (KR); **Jinkyu BANG**, Gyeonggi-do (KR); **Jinu KIM**, Seoul (KR); **Donghwan KIM**, Gyeonggi-do (KR); **Taegyu KIM**, Gyeonggi-do (KR); **Kiyoung CHANG**, Seoul (KR)

(21) Appl. No.: **16/667,415**

(22) Filed: **Oct. 29, 2019**

Related U.S. Application Data

(63) Continuation of application No. 16/126,534, filed on Sep. 10, 2018, which is a continuation of application No. 15/351,161, filed on Nov. 14, 2016, now Pat. No. 10,075,569.

(30) **Foreign Application Priority Data**

Nov. 13, 2015 (KR) 10-2015-0159787

Publication Classification

(51) **Int. Cl.**

H04M 1/02	(2006.01)
H01Q 1/24	(2006.01)
H01Q 5/385	(2006.01)
H01Q 9/30	(2006.01)

(52) **U.S. Cl.**

CPC ***H04M 1/0218*** (2013.01); ***H01Q 1/243*** (2013.01); ***H01Q 5/385*** (2015.01); *H04M 1/0214* (2013.01); ***H04M 1/026*** (2013.01); *H04M 1/0268* (2013.01); *H04M 1/0235* (2013.01); ***H01Q 9/30*** (2013.01)

(57) **ABSTRACT**

An electronic device is provided. The electronic device includes a housing and a connection part. The housing includes a first housing portion that includes a first side face, and a second housing portion that includes a second side face. The connection part connects the first housing portion and the second housing portion. A first conductive member extends along at least a portion of the first side face, a first non-conductive member is disposed on the first side face, a second conductive member extends along at least a portion of the second side face, a second non-conductive member is disposed on the second side face, and when the second housing portion faces the first housing portion, the first non-conductive member and the second non-conductive member are substantially aligned.

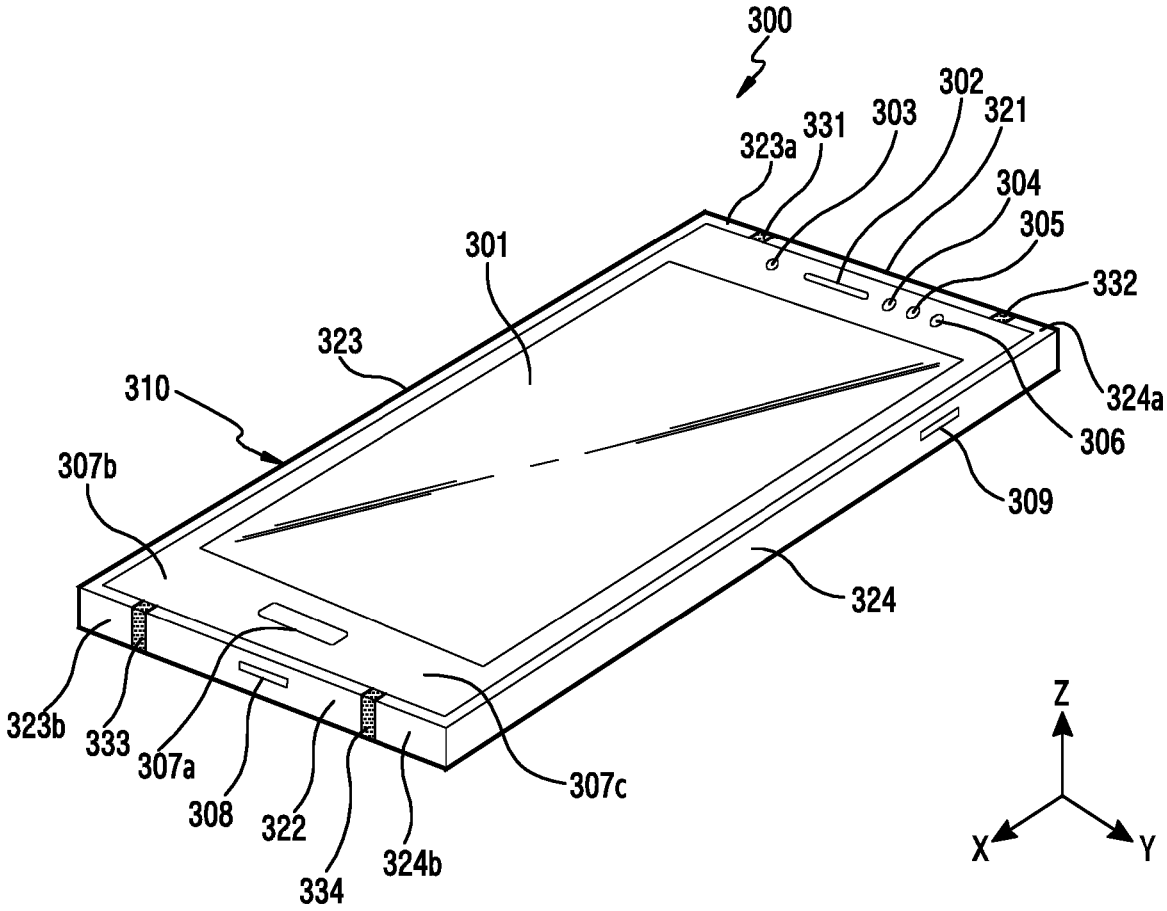

US 20200073445A1

(19) United States

(12) Patent Application Publication

Kuna et al.

(10) Pub. No.: US 2020/0073445 A1

(43) Pub. Date: Mar. 5, 2020

(54) **ELECTRONIC DEVICE HOUSING WITH INTEGRATED ANTENNA**

(71) Applicant: **Apple Inc.**, Cupertino, CA (US)

(72) Inventors: **Melody L. Kuna**, Palo Alto, CA (US); **Carlo Catalano**, Capitola, CA (US); **Lee B. Hamstra**, Mountain View, CA (US); **Ross Errett**, Cupertino, CA (US); **Devin Williams**, Cupertino, CA (US); **Florence W. Ow**, Los Altos Hills, CA (US); **Alex Chung Lap Yeung**, San Francisco, CA (US); **Carli Oster**, San Francisco, CA (US)

(21) Appl. No.: **16/183,591**

(22) Filed: **Nov. 7, 2018**

Related U.S. Application Data

(60) Provisional application No. 62/725,227, filed on Aug. 30, 2018.

Publication Classification

(51) **Int. Cl.**

G06F 1/16	(2006.01)
H01Q 1/22	(2006.01)
H01Q 1/24	(2006.01)
G06F 3/044	(2006.01)

(52) **U.S. Cl.**

CPC ***G06F 1/1656*** (2013.01); ***H01Q 1/2258*** (2013.01); ***G06F 3/044*** (2013.01); ***G06F 1/1626*** (2013.01); ***H01Q 1/243*** (2013.01)

(57) **ABSTRACT**

An electronic device may include a display, a housing member at least partially surrounding the display and including a first segment defining a first portion of an exterior surface of the electronic device, a second segment defining a second portion of the exterior surface of the electronic device and configured to function as an antenna, and a bridge segment structurally and conductively coupling the first segment to the second segment. The electronic device may also include a molded element positioned between the first segment and the second segment and defining a third portion of the exterior surface of the electronic device.

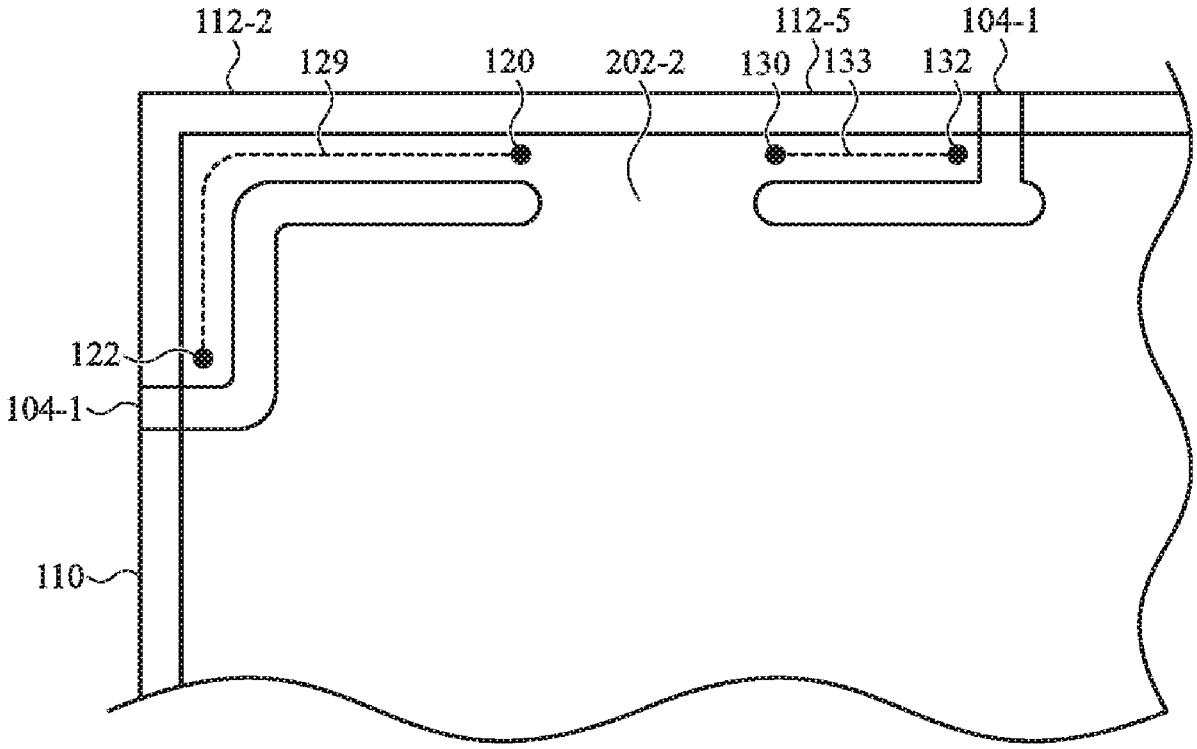

US 20200076049A1

(19) United States

(12) Patent Application Publication

(10) Pub. No.: US 2020/0076049 A1

(43) Pub. Date: Mar. 5, 2020

CHANG et al.

(54) **MOBILE DEVICE**

(71) Applicant: **Acer Incorporated**, New Taipei City (TW)

(72) Inventors: **Kun-Sheng CHANG**, New Taipei City (TW); **Ching-Chi LIN**, New Taipei City (TW)

(21) Appl. No.: **16/360,567**

(22) Filed: **Mar. 21, 2019**

(30) **Foreign Application Priority Data**

Sep. 3, 2018 (TW) 107130820

Publication Classification

(51) **Int. Cl.**

H01Q 1/22	(2006.01)
H01Q 5/378	(2006.01)
H01Q 19/24	(2006.01)

(52) **U.S. Cl.**

CPC ***H01Q 1/2266*** (2013.01); ***H01Q 19/24*** (2013.01); ***H01Q 5/378*** (2015.01)

(57) **ABSTRACT**

A mobile device includes a body, an antenna structure, and a floating radiation element. The body includes a frame and a housing. The frame is positioned on a first plane. The housing includes a parallel region and a cutting retraction region. The parallel region is positioned on a second plane which is parallel to the first plane. The floating radiation element is adjacent to the antenna structure, and is configured to enhance the radiation efficiency of the antenna structure. The antenna structure has a first vertical projection on the housing, and the first vertical projection is inside the parallel region. The floating radiation element has a second vertical projection on the housing, and the second vertical projection is inside the cutting retraction region. The frame is at least partially made of a nonconductive material. The housing is at least partially made of a conductive material.

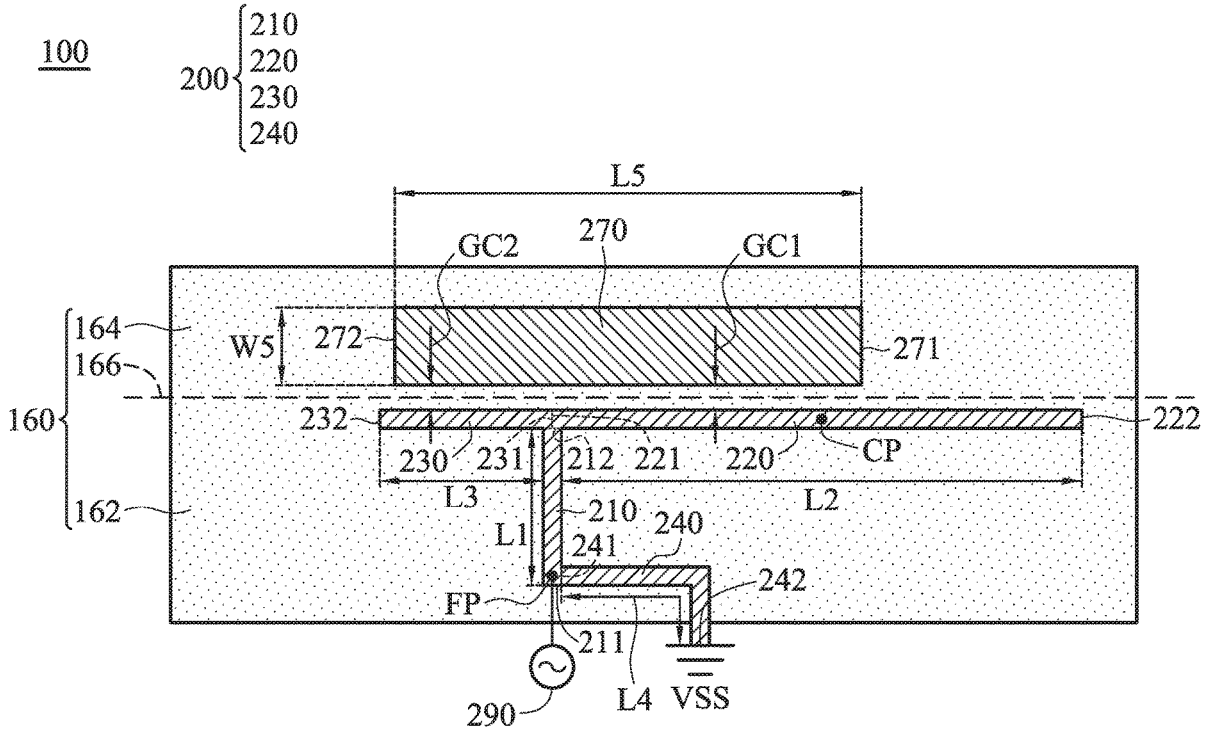

US 20200076050A1

(19) United States
(12) Patent Application Publication
Nishioka
(10) Pub. No.: US 2020/0076050 A1
(43) Pub. Date: Mar. 5, 2020

(54) ELECTRONIC DEVICE HAVING AN ANTENNA

(71) Applicant: **LENOVO (SINGAPORE) PTE. LTD.**, SINGAPORE (SG)

(72) Inventor: **Yoshio Nishioka**, Kanagawa (JP)

(21) Appl. No.: **16/554,807**

(22) Filed: **Aug. 29, 2019**

(30) **Foreign Application Priority Data**

Aug. 30, 2018 (JP) 2018-161186

Publication Classification

(51) **Int. Cl.**
H01Q 1/22 (2006.01)
H01Q 1/24 (2006.01)
H01Q 9/04 (2006.01)
G06F 1/16 (2006.01)

(52) **U.S. Cl.**
CPC *H01Q 1/2266* (2013.01); *G06F 1/1616* (2013.01); *H01Q 9/04* (2013.01); *H01Q 1/243* (2013.01)

(57) **ABSTRACT**

An electronic apparatus capable of reducing specific absorption rate (SAR) is disclosed. The antenna device includes an antenna element to which power is supplied, and at least one resonant antenna element which is disposed such that the longitudinal direction thereof and the longitudinal direction of the antenna element are substantially parallel to each other and which can resonate with the antenna element.

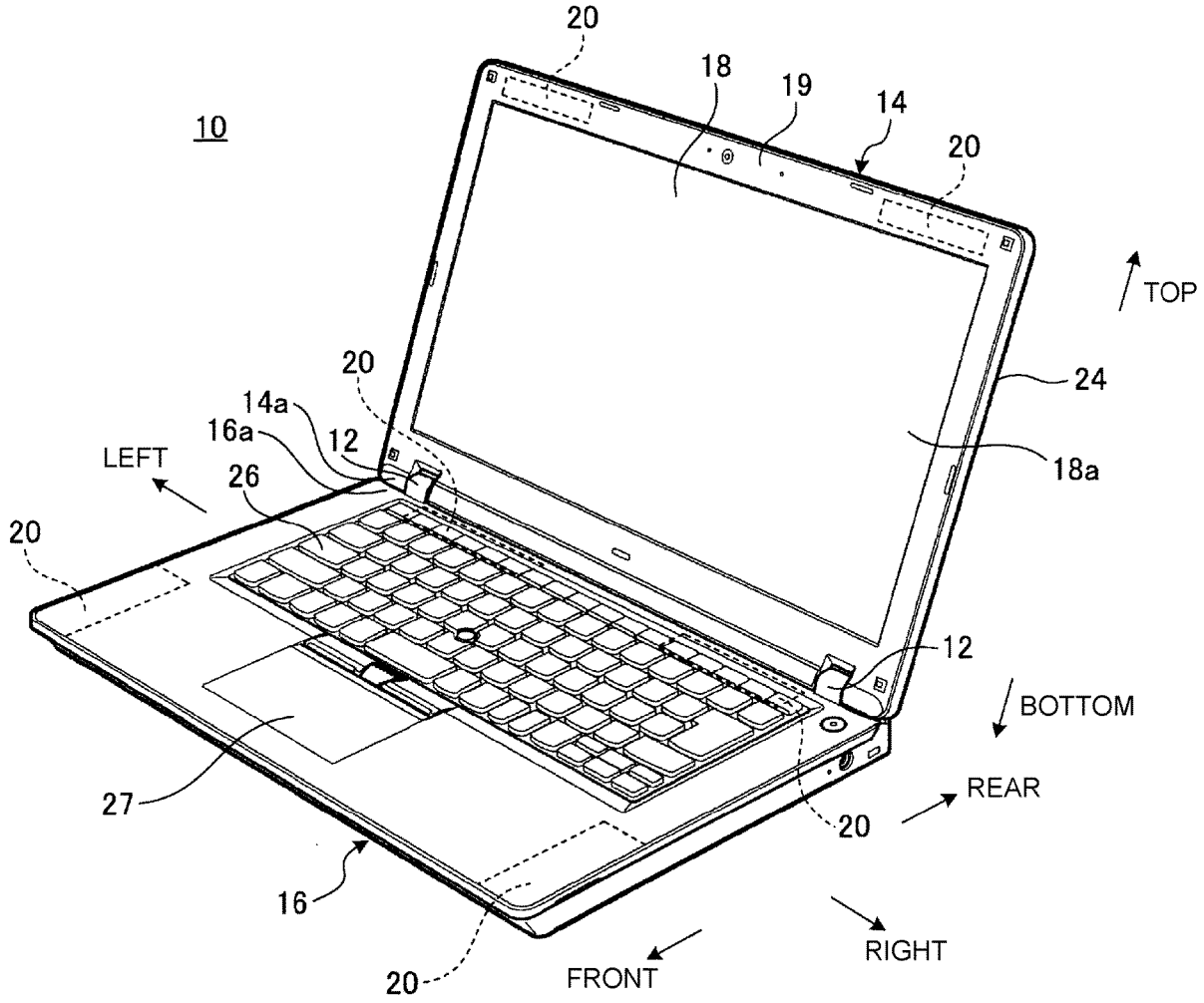

US 20200076055A1

(19) United States

(12) Patent Application Publication

JEON

(10) Pub. No.: US 2020/0076055 A1

(43) Pub. Date: Mar. 5, 2020

(54) ANTENNA ARRAY AND ELECTRONIC DEVICE INCLUDING ANTENNA ARRRAY

(71) Applicant: **Samsung Electronics Co., Ltd.**, Gyeonggi-do (KR)

(72) Inventor: **Seung Gil JEON**, Gyeonggi-do (KR)

(21) Appl. No.: **16/614,710**

(22) PCT Filed: **May 17, 2018**

(86) PCT No.: **PCT/KR2018/005660**

§ 371 (c)(1),
(2) Date: **Nov. 18, 2019**

(30) **Foreign Application Priority Data**

May 30, 2017 (KR) 10-2017-0066626

Publication Classification

(51) **Int. Cl.**

H01Q 1/24	(2006.01)
H01Q 21/06	(2006.01)
H01Q 21/00	(2006.01)

(52) **U.S. Cl.**

CPC ***H01Q 1/24*** (2013.01); ***H01Q 21/0006*** (2013.01); ***H01Q 21/06*** (2013.01)

(57) **ABSTRACT**

An electronic device according to an embodiment of the disclosure may include housing including a rear cover and a cover glass facing away from the rear cover, an antenna array interposed between the rear cover and the cover glass and including at least one or more antenna units, a printed circuit board (PCB) interposed between the antenna array and the cover glass, and a communication circuit disposed on the PCB and feeding the antenna array. Other various embodiments as understood from the specification are also possible.

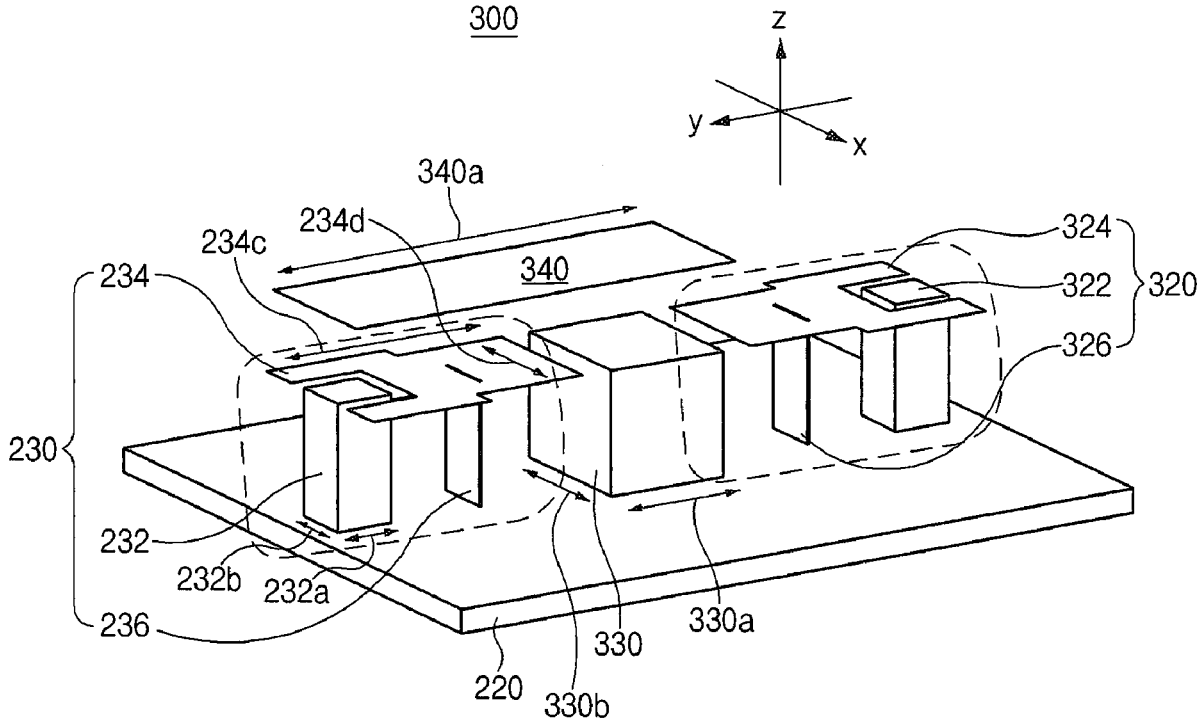

US 20200076056A1

(19) United States

(12) Patent Application Publication

Froese et al.

(10) Pub. No.: US 2020/0076056 A1

(43) Pub. Date: Mar. 5, 2020

(54) **HOUSING AND ANTENNA ARCHITECTURE FOR MOBILE DEVICE**

(71) Applicant: **Apple Inc.**, Cupertino, CA (US)

(72) Inventors: **Kevin M. Froese**, San Francisco, CA (US); **Paul U. Leutheuser**, Saratoga, CA (US); **Martin J. Auclair**, Campbell, CA (US); **Christopher J. Durning**, Cupertino, CA (US); **Jun Ham**, Cupertino, CA (US); **Lucy E. Browning**, San Francisco, CA (US); **Sawyer I. Cohen**, Menlo Park, CA (US); **Richard Hung Minh Dinh**, Cupertino, CA (US); **Donald J. Parr**, Mountain View, CA (US)

(21) Appl. No.: **16/142,285**

(22) Filed: **Sep. 26, 2018**

Related U.S. Application Data

(60) Provisional application No. 62/725,237, filed on Aug. 30, 2018.

Publication Classification

(51) **Int. Cl.**

H01Q 1/24	(2006.01)
H05K 5/02	(2006.01)
H05K 5/00	(2006.01)
H01Q 5/30	(2006.01)
H04M 1/02	(2006.01)

(52) **U.S. Cl.**

CPC ***H01Q 1/243*** (2013.01); ***H05K 5/0208*** (2013.01); ***H04M 1/0283*** (2013.01); ***H05K 5/0217*** (2013.01); ***H01Q 5/30*** (2015.01); ***H05K 5/0017*** (2013.01)

(57) **ABSTRACT**

A device includes a display and a housing. The housing surrounds the display and has four corners defining portions of an exterior surface of the device. The housing includes a first housing segment defining at least part of a first corner of the four corners and configured to operate as an antenna; a second housing segment defining at least part of a second corner of the four corners; and a third housing segment defining at least part of a third corner of the four corners. The third corner forms part of the housing diagonally opposite the second corner. The housing further includes a non-conductive housing component that structurally couples the first housing segment to another portion of the housing.

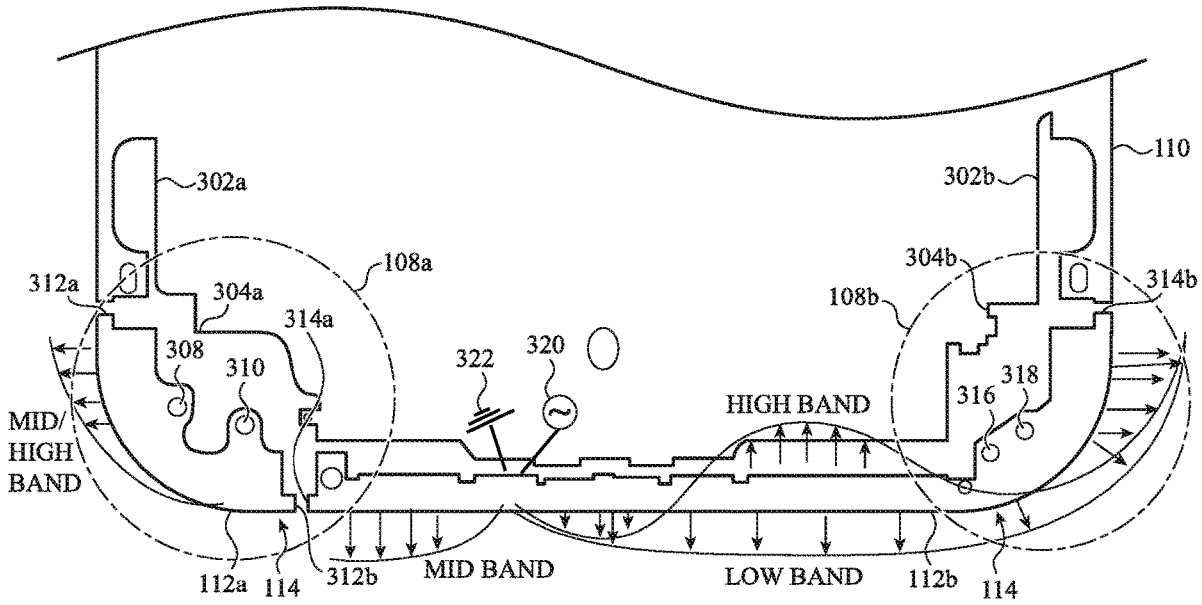

US 20200076057A1

(19) United States

(12) Patent Application Publication

Leutheuser et al.

(10) Pub. No.: US 2020/0076057 A1

(43) Pub. Date: Mar. 5, 2020

(54) **HOUSING AND ANTENNA ARCHITECTURE FOR MOBILE DEVICE**

(71) Applicant: **Apple Inc.**, Cupertino, CA (US)

(72) Inventors: **Paul U. Leutheuser**, Saratoga, CA (US); **Martin J. Auclair**, Campbell, CA (US); **Kevin M. Froese**, San Francisco, CA (US); **Christopher J. Durning**, Cupertino, CA (US); **Jun Ham**, Cupertino, CA (US); **Lucy E. Browning**, San Francisco, CA (US); **Sawyer I. Cohen**, Menlo Park, CA (US); **Richard Hung Minh Dinh**, Cupertino, CA (US); **Donald J. Parr**, Mountain View, CA (US)

(21) Appl. No.: **16/142,352**

(22) Filed: **Sep. 26, 2018**

Related U.S. Application Data

(60) Provisional application No. 62/725,237, filed on Aug. 30, 2018.

Publication Classification

(51) **Int. Cl.**

H01Q 1/24	(2006.01)
H04M 1/02	(2006.01)
H01Q 13/10	(2006.01)
H01Q 5/30	(2006.01)

(52) **U.S. Cl.**

CPC ***H01Q 1/243*** (2013.01); ***H04M 1/0249*** (2013.01); *H04M 1/0283* (2013.01); ***H01Q 5/30*** (2015.01); ***H01Q 13/10*** (2013.01)

(57) **ABSTRACT**

A device includes a display and a housing. The housing at least partially surrounds the display. The housing includes a first housing segment defining at least a first portion of an exterior surface of the device and a first interlock feature having an interlock surface that is offset with respect to an end surface of the first housing segment. The first interlock feature has a first opening formed in the interlock surface. The housing further includes a second housing segment defining at least a second portion of the exterior surface of the device and a second interlock feature having a second opening aligned with the first opening, and a non-conductive housing component defining a third portion of the exterior surface of the device and extending into the first opening and the second opening.

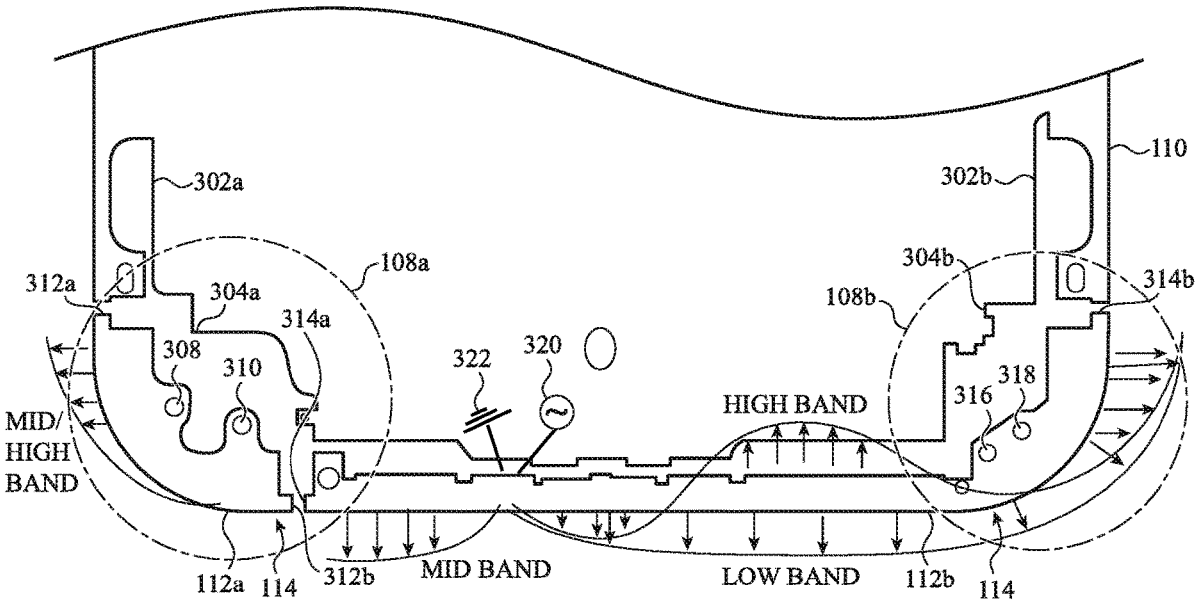

US 20200076058A1

(19) United States

(12) Patent Application Publication

(10) Pub. No.: US 2020/0076058 A1

(43) Pub. Date: Mar. 5, 2020

Zhang et al.

(54) **ELECTRONIC DEVICE WITH SEGMENTED HOUSING HAVING MOLDED SPLITS**

(71) Applicant: **Apple Inc.**, Cupertino, CA (US)

(72) Inventors: **Yaocheng Zhang**, Cupertino, CA (US); **John J. Baker**, Cupertino, CA (US); **Martin J. Auclair**, Waterloo, CA (US); **Paul U. Leutheuser**, Saratoga, CA (US); **Christopher J. Durning**, Cupertino, CA (US); **Jun Ham**, Cupertino (CA)

(21) Appl. No.: **16/205,145**

(22) Filed: **Nov. 29, 2018**

Related U.S. Application Data

(60) Provisional application No. 62/725,197, filed on Aug. 30, 2018, provisional application No. 62/729,319, filed on Sep. 10, 2018.

Publication Classification

(51) **Int. Cl.**

H01Q 1/24	(2006.01)
H01Q 1/22	(2006.01)
H01Q 1/38	(2006.01)
H04B 1/3888	(2006.01)
H01Q 13/10	(2006.01)
H01Q 9/30	(2006.01)
H01Q 9/04	(2006.01)
H05K 5/02	(2006.01)
G06F 1/18	(2006.01)

(52) **U.S. Cl.**

CPC ***H01Q 1/243*** (2013.01); ***H01Q 1/2258*** (2013.01); ***H01Q 1/38*** (2013.01); ***H04B 1/3888*** (2013.01); ***G06F 1/181*** (2013.01); ***H01Q 9/30*** (2013.01); ***H01Q 9/045*** (2013.01); ***H05K 5/0247*** (2013.01); ***H01Q 13/10*** (2013.01)

(57) **ABSTRACT**

The disclosure is directed to a multi-segment housing for an electronic device that includes multiple conductive segments that are structurally coupled by one or more non-conductive housing segments or splits. One or more of the conductive segments may be configured to operate as an antenna and the non-conductive housing segments may provide electrical insulation between the conductive segment and one or more adjacent housing segments. The non-conductive housing segment may be formed from a polymer having an array of fibers dispersed within the polymer. The fibers may be aligned along one or more fiber directions, which may be substantially perpendicular to an exterior surface of the housing.

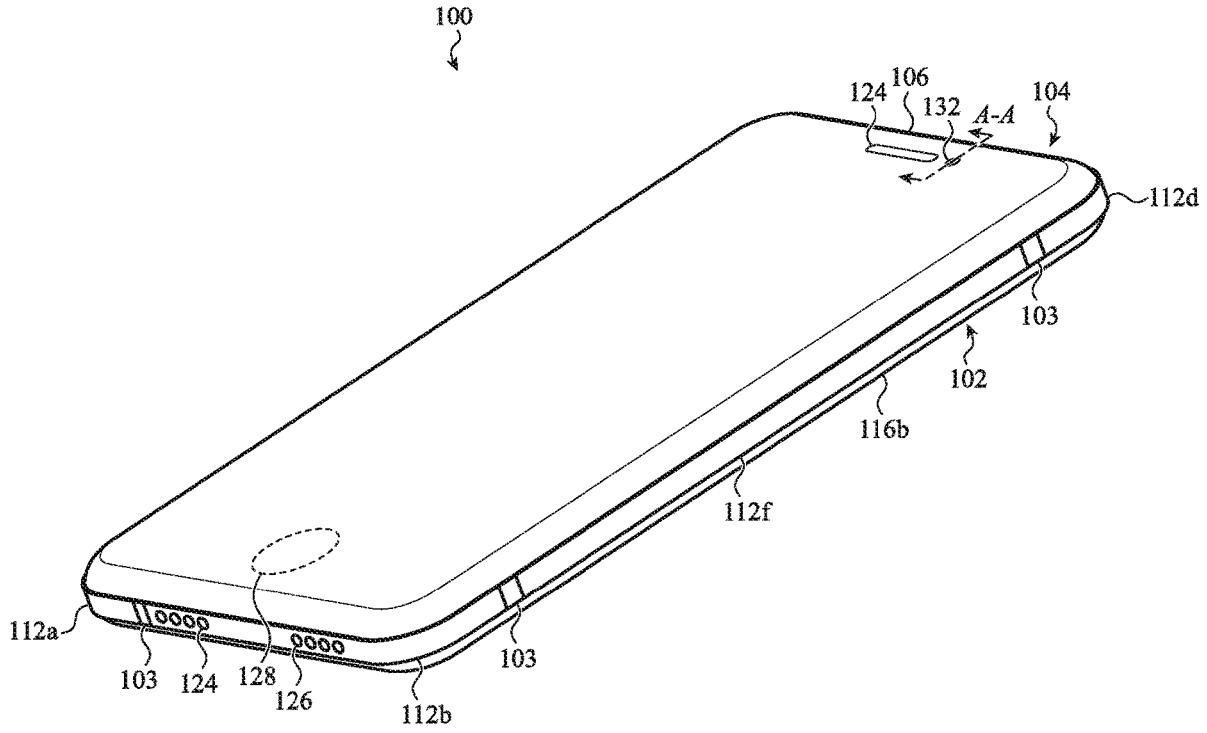

US 20200076059A1

(19) United States

(12) Patent Application Publication

HSIAO et al.

(10) Pub. No.: US 2020/0076059 A1

(43) Pub. Date: Mar. 5, 2020

(54) **ANTENNA STRUCTURE**

(71) Applicant: **Chiun Mai Communication Systems, Inc.**, New Taipei (TW)

(72) Inventors: **JIA-HUNG HSIAO**, New Taipei (TW); **SHU-WEI JHANG**, New Taipei (TW); **WEN-YUAN CHEN**, New Taipei (TW); **CHANG-HSIN OU**, New Taipei (TW); **MING-YU CHOU**, New Taipei (TW); **CHIA-MING LIANG**, New Taipei (TW); **KUO-LUN HUANG**, New Taipei (TW)

(21) Appl. No.: **16/545,223**

(22) Filed: **Aug. 20, 2019**

(30) **Foreign Application Priority Data**

Aug. 31, 2018 (CN) 201811010843.4

Publication Classification

(51) **Int. Cl.**

H01Q 1/24	(2006.01)
H01Q 1/12	(2006.01)
H01Q 21/00	(2006.01)
H01Q 21/28	(2006.01)
H01Q 5/335	(2006.01)
H01Q 5/371	(2006.01)

(52) **U.S. Cl.**

CPC ***H01Q 1/243*** (2013.01); ***H01Q 1/1207*** (2013.01); ***H01Q 5/371*** (2015.01); ***H01Q 21/28*** (2013.01); ***H01Q 5/335*** (2015.01); ***H01Q 21/0006*** (2013.01)

(57) **ABSTRACT**

An antenna structure includes a metal frame. The metal frame includes a first gap, a second gap, a third gap, and a fourth gap to separate a first antenna, a second antenna, a third antenna, and a fourth antenna from the metal frame. The metal frame includes a fifth antenna. The first antenna, the second antenna, the third antenna, and the fourth antenna cooperatively form a first multiple-input multiple-output (MIMO) antenna to provide a 4×4 multiple-input multiple-output function in a second frequency band. The first antenna, the second antenna, the third antenna, and the fifth antenna cooperatively form a second MIMO antenna to provide a 4×4 multiple-input multiple-output function in a third frequency band. The first antenna and the third antenna cooperatively form a third MIMO antenna to provide a 2×2 multiple-input multiple-output function in a first frequency band.

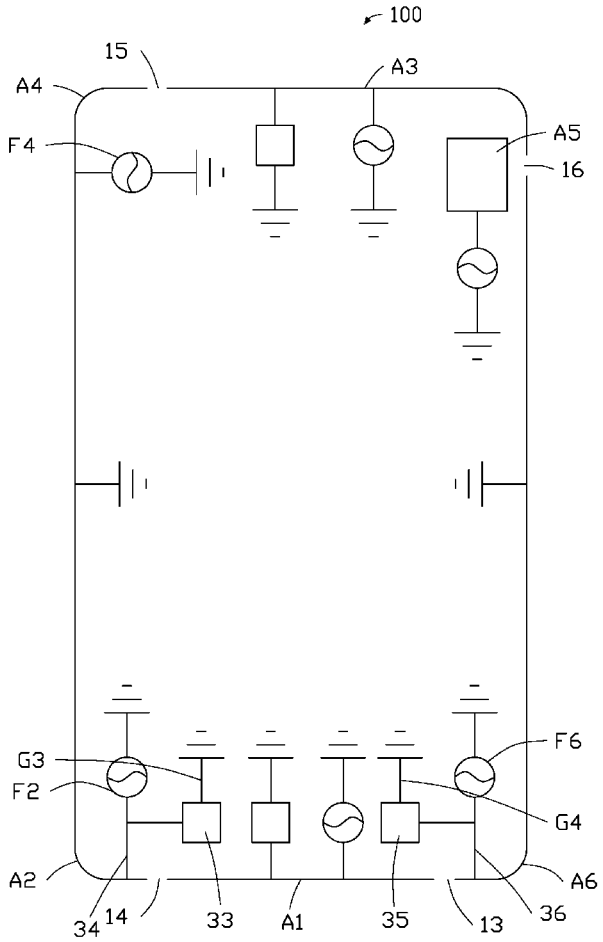

US 20200076060A1

(19) United States

(12) Patent Application Publication

LIN et al.

(10) Pub. No.: US 2020/0076060 A1

(43) Pub. Date: Mar. 5, 2020

(54) ANTENNA AND WIRELESS COMMUNICATION DEVICE USING THE SAME

(71) Applicant: **Chiun Mai Communication Systems, Inc.**, New Taipei (TW)

(72) Inventors: **YEN-HUI LIN**, New Taipei (TW); **WEN-YI KUO**, New Taipei (TW); **PO-CHING HUANG**, New Taipei (TW); **CHUEH-CHUAN CHEN**, New Taipei (TW)

(21) Appl. No.: **16/550,581**

(22) Filed: **Aug. 26, 2019**

(30) **Foreign Application Priority Data**

Aug. 31, 2018 (CN) 201811012451.1

Publication Classification

(51) **Int. Cl.**

H01Q 1/24	(2006.01)
H04B 1/3827	(2006.01)
H01Q 1/22	(2006.01)

(52) **U.S. Cl.**

CPC ***H01Q 1/243*** (2013.01); ***H01Q 1/2266*** (2013.01); ***H04B 1/3833*** (2013.01)

(57) **ABSTRACT**

An antenna of reduced size but of multiple functions according to manual adjustment includes a side frame made of metallic material, a feeding portion, and a moving module. The side frame defines first and second gaps each passing through the side frame to form at least one radiating portion. The feeding portion can feed current to either of the radiating portions. The metallic and movable moving module including an extending portion is movable relative to the side frame. In a first position, the extending portion is not connected to any radiating portion, and when moved to a second position, the extending portion is connected to one of the radiating portions.

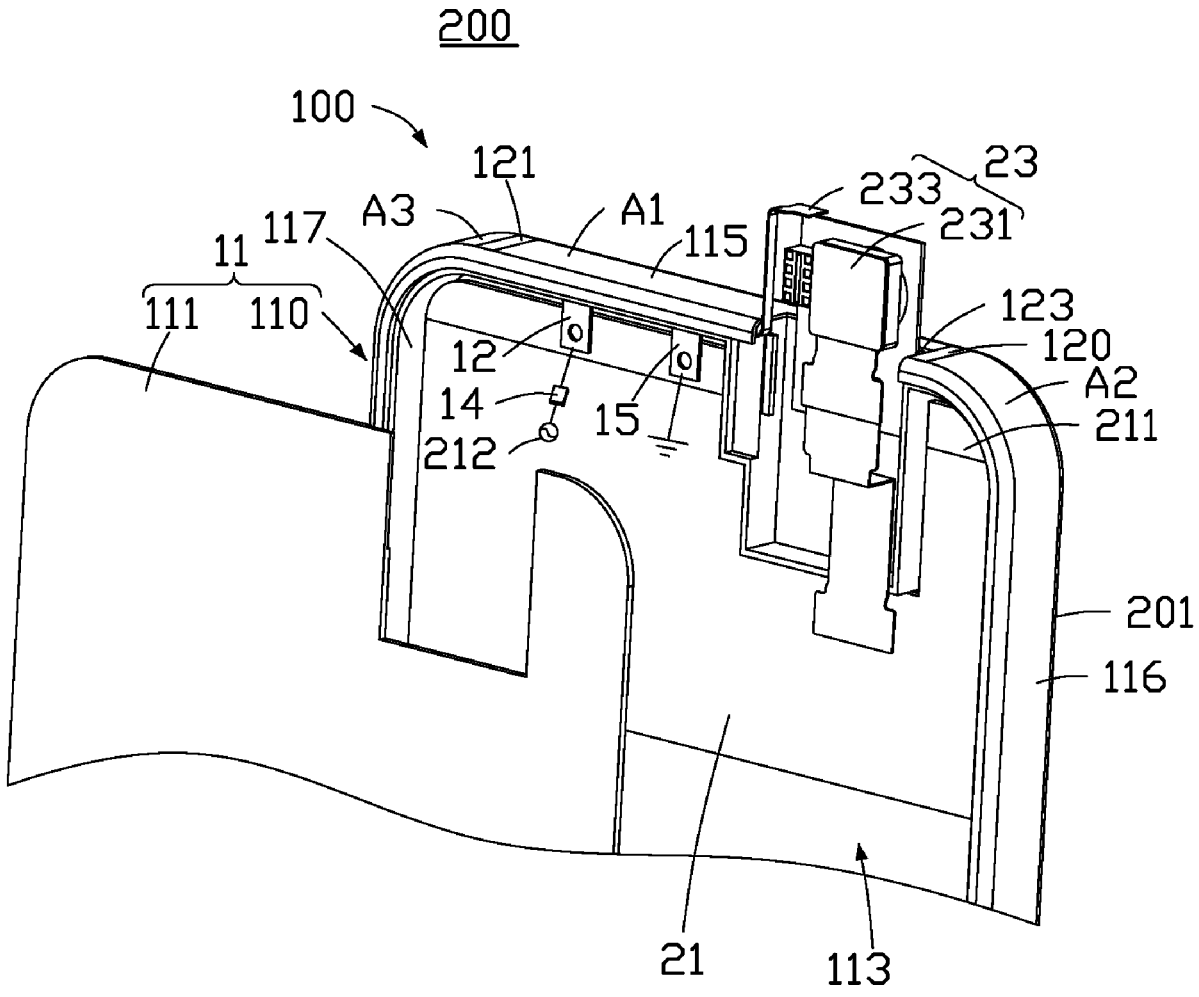

US 20200076061A1

(19) United States

(12) Patent Application Publication

CHEN et al.

(10) Pub. No.: US 2020/0076061 A1

(43) Pub. Date: Mar. 5, 2020

(54) **MOBILE DEVICE**

(71) Applicant: **Wistron NeWeb Corp.**, Hsinchu (TW)

(72) Inventors: **Ching-Wen CHEN**, Hsinchu (TW); **Chia-Hao CHANG**, Hsinchu (TW)

(21) Appl. No.: **16/550,713**

(22) Filed: **Aug. 26, 2019**

(30) **Foreign Application Priority Data**

Aug. 28, 2018 (TW) 107129974

Publication Classification

(51) **Int. Cl.**

H01Q 1/24	(2006.01)
H01Q 9/28	(2006.01)
H01Q 1/36	(2006.01)
H01Q 21/06	(2006.01)
H01Q 21/00	(2006.01)

(52) **U.S. Cl.**

CPC ***H01Q 1/243*** (2013.01); ***H01Q 9/285*** (2013.01); ***H01Q 21/0068*** (2013.01); ***H01Q 21/064*** (2013.01); ***H01Q 1/36*** (2013.01)

(57) **ABSTRACT**

A mobile device includes a metal back cover, a dielectric substrate, a grounding metal element, a first radiation element, and a second radiation element. The metal back cover has a slot. The dielectric substrate has a first surface and a second surface, and the second surface faces the slot. The grounding metal element extends onto the first surface of the dielectric substrate. The first radiation element has a feeding point, and is disposed on the first surface of the dielectric substrate. The first vertical projection of the first radiation element at least partially overlaps the slot. The second radiation element is disposed on the second surface of the dielectric substrate. The second vertical projection of the second radiation element at least partially overlaps the slot. An antenna structure is formed by the first radiation element, the second radiation element, and the slot of the metal back cover.

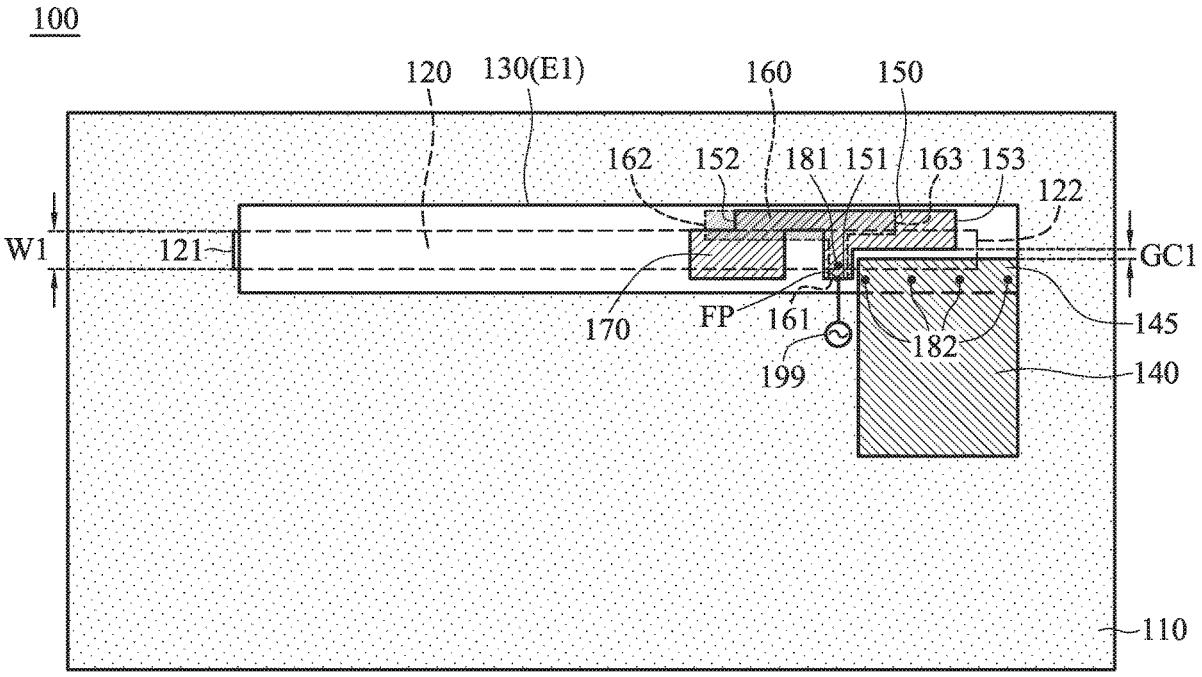

US 20200076062A1

(19) United States
(12) Patent Application Publication
LEE et al.
(10) Pub. No.: US 2020/0076062 A1
(43) Pub. Date: Mar. 5, 2020

(54) **FOLDABLE DEVICE COMPRISING ANTENNA**

(71) Applicant: **Samsung Electronics Co., Ltd**, Suwon-si (KR)

(72) Inventors: **Woosup LEE**, Suwon-si (KR); **Yongyoun KIM**, Suwon-si (KR); **Jungsik PARK**, Suwon-si (KR); **Sehwan CHOI**, Suwon-si (KR)

(21) Appl. No.: **16/562,179**

(22) Filed: **Sep. 5, 2019**

(30) **Foreign Application Priority Data**

Sep. 5, 2018 (KR) 10-2018-0105928

Publication Classification

(51) **Int. Cl.**
H01Q 1/24 (2006.01)
H04M 1/02 (2006.01)
H01Q 5/307 (2006.01)

(52) **U.S. Cl.**
CPC ***H01Q 1/243*** (2013.01); ***H04M 1/0291*** (2013.01); ***H01Q 5/307*** (2015.01); ***H04M 1/0268*** (2013.01); ***H04M 1/0277*** (2013.01)

(57) **ABSTRACT**

Disclosed is an electronic device. The electronic device may comprise a first structure and a second structure mutually foldably connected with the first structure about a first axis extending in a first direction. A wireless communication circuit of the electronic device is electrically connected with a first radiator and a second radiator and is electrically separated from the second radiator in a folded state.

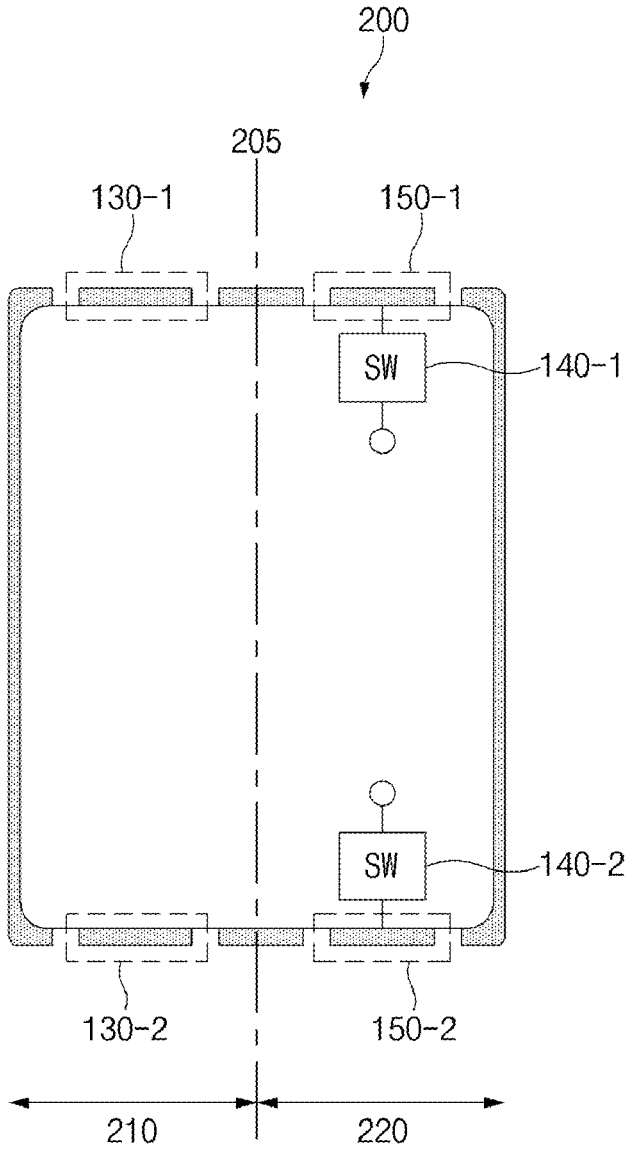

US 20200076080A1

(19) United States

(12) Patent Application Publication

(10) Pub. No.: US 2020/0076080 A1

(43) Pub. Date: Mar. 5, 2020

LIU et al.

(54) ANTENNA SYSTEM AND TERMINAL

(71) Applicant: **Beijing Xiaomi Mobile Software Co., Ltd.**, Beijing (CN)

(72) Inventors: **Jiarong LIU**, Beijing (CN); **Han LU**, Beijing (CN)

(73) Assignee: **Beijing Xiaomi Mobile Software Co., Ltd.**

(21) Appl. No.: **16/377,529**

(22) Filed: **Apr. 8, 2019**

(30) **Foreign Application Priority Data**

Aug. 31, 2018 (CN) 201811014066.0

Publication Classification

(51) **Int. Cl.**

H01Q 5/50	(2006.01)
H01Q 1/52	(2006.01)
H01Q 1/24	(2006.01)

(52) **U.S. Cl.**

CPC ***H01Q 5/50*** (2015.01); ***H01Q 1/243*** (2013.01); ***H01Q 1/521*** (2013.01)

(57) **ABSTRACT**

An antenna system is provided. The antenna system includes a first metal radiator, a second metal radiator, a first matching network, a second matching network, a first radio frequency path, and a second radio frequency path, wherein a tail end of the first metal radiator is connected with a first feed point of the antenna system and the first feed point is connected with the first radio frequency path through the first matching network; and a tail end of the second metal radiator is connected with a second feed point of the antenna system and the second feed point is connected with the second radio frequency path through the second matching network. A terminal including the antenna system is also provided.

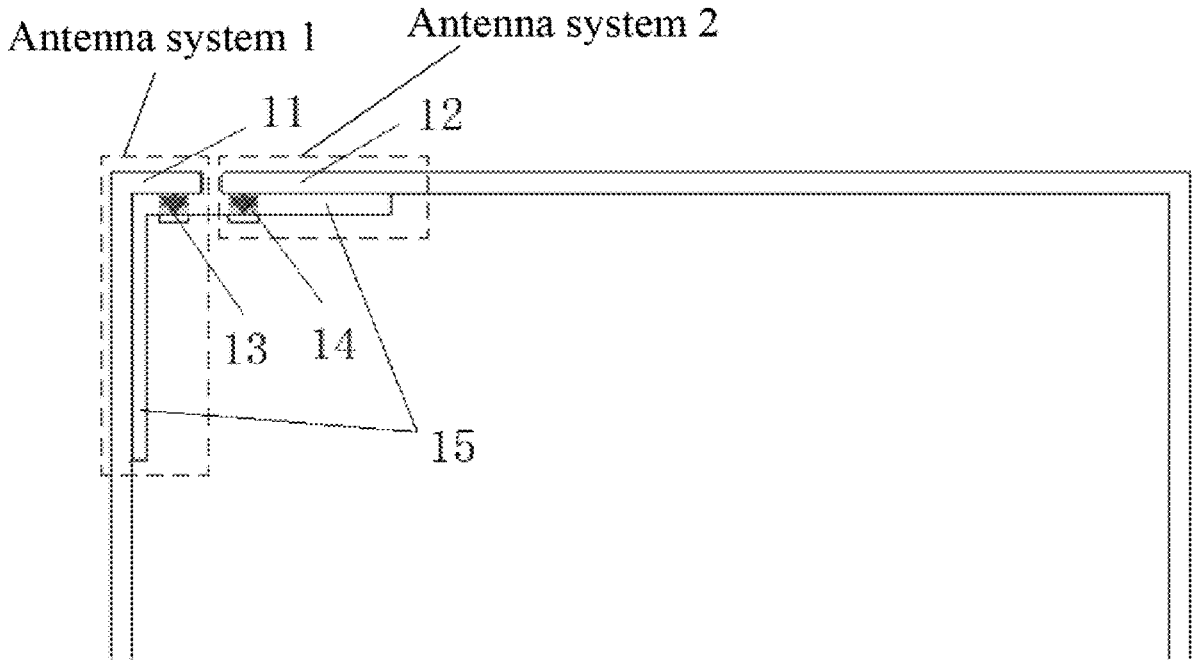

US 20200083603A1

(19) United States
(12) Patent Application Publication
WU et al.
(10) Pub. No.: US 2020/0083603 A1
(43) Pub. Date: Mar. 12, 2020

(54) **DUAL-FEED LOOP ANTENNA STRUCTURE AND ELECTRONIC DEVICE**

(71) Applicant: **PEGATRON CORPORATION**, TAIPEI CITY (TW)

(72) Inventors: **CHIEN-YI WU**, Taipei City (TW); **Chao-Hsu Wu**, Taipei City (TW); **Shih-Keng Huang**, Taipei City (TW); **Ching-Hsiang Ko**, Taipei City (TW); **Sheng-Chin Hsu**, Taipei City (TW); **Cheng-Hsiung Wu**, Taipei City (TW)

(73) Assignee: **PEGATRON CORPORATION**, TAIPEI CITY (TW)

(21) Appl. No.: **16/557,743**

(22) Filed: **Aug. 30, 2019**

(30) **Foreign Application Priority Data**

Sep. 10, 2018 (TW) 107131659

Publication Classification

(51) **Int. Cl.**

H01Q 1/52	(2006.01)
H01Q 1/48	(2006.01)
H01Q 5/35	(2006.01)
H01Q 9/04	(2006.01)
H01Q 5/335	(2006.01)
H01Q 7/00	(2006.01)

(52) **U.S. Cl.**

CPC ***H01Q 1/521*** (2013.01); ***H01Q 1/48*** (2013.01); ***H01Q 7/00*** (2013.01); ***H01Q 9/045*** (2013.01); ***H01Q 5/335*** (2015.01); ***H01Q 5/35*** (2015.01)

(57) **ABSTRACT**

A dual-feed loop antenna structure adapted to be disposed on a substrate includes two loop antennas and two open-loop grounding radiators. Each of the loop antennas is used for resonating at a first frequency band and a second frequency band and includes a feed-in end and a ground segment. The two open-loop grounding radiators are located between the two loop antennas. Each of the open-loop grounding radiators extends from the ground segment of the corresponding loop antenna. A coupling gap is formed between the two open-loop grounding radiators. One of the loop antennas and the open-loop grounding radiator connected thereto completely overlap the other loop antenna and the other open-loop grounding radiator connected thereto after being mirrored and reversed. An electronic device is further provided.

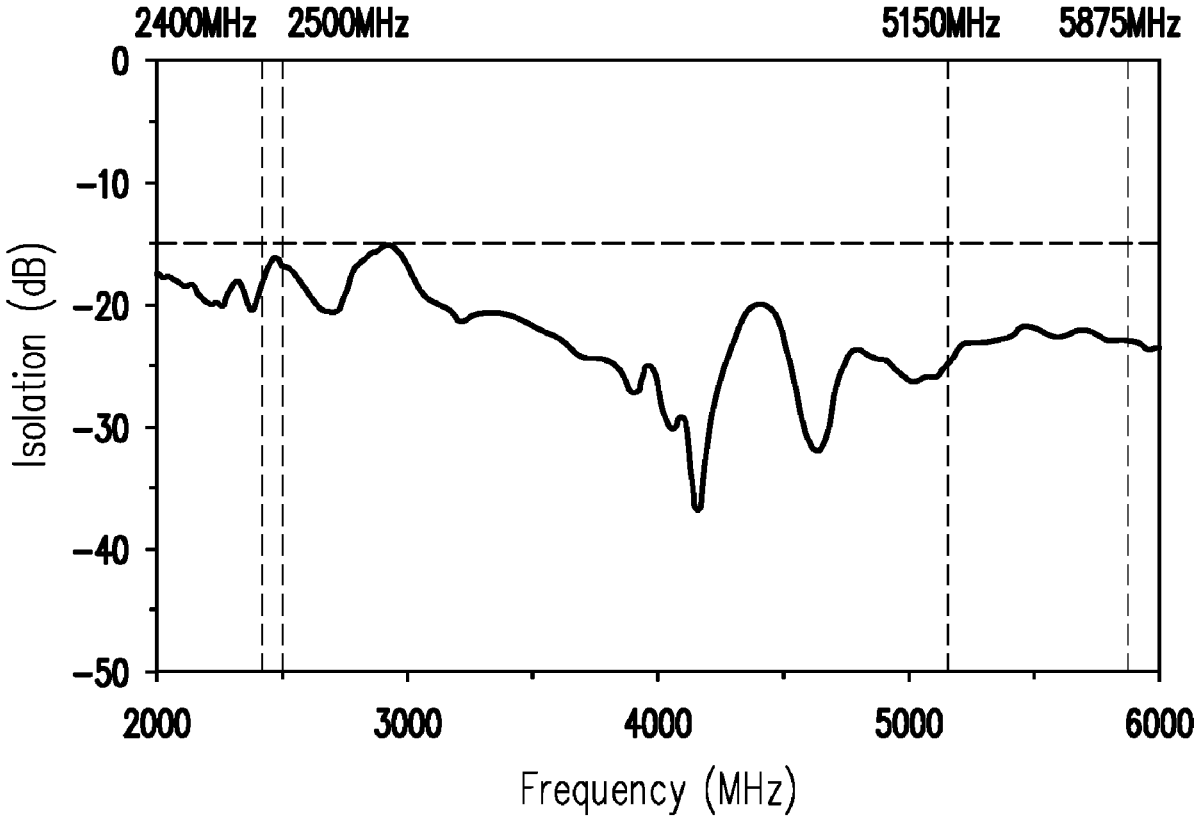

US 20200083606A1

(19) United States
(12) Patent Application Publication
Huang
(10) Pub. No.: US 2020/0083606 A1
(43) Pub. Date: Mar. 12, 2020

(54) **ANTENNA DEVICE AND PRINTED CIRCUIT BOARD**

(71) Applicants: **LITE-ON ELECTRONICS (GUANGZHOU) LIMITED**, Guangzhou (CN); **Lite-On Technology Corporation**, Taipei (TW)

(72) Inventor: **Tzung-Fang Huang**, Taipei (TW)

(73) Assignees: **LITE-ON ELECTRONICS (GUANGZHOU) LIMITED**, Guangzhou (CN); **Lite-On Technology Corporation**, Taipei (TW)

(21) Appl. No.: **16/243,092**

(22) Filed: **Jan. 9, 2019**

(30) **Foreign Application Priority Data**

Sep. 7, 2018 (CN) 201811041315.5

Publication Classification

(51) **Int. Cl.**
H01Q 9/04 (2006.01)
H01Q 1/48 (2006.01)
H05K 1/02 (2006.01)

(52) **U.S. Cl.**
CPC . ***H01Q 9/0407*** (2013.01); *H05K 2201/10098* (2013.01); ***H05K 1/0237*** (2013.01); ***H01Q 1/48*** (2013.01)

(57) **ABSTRACT**
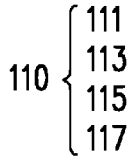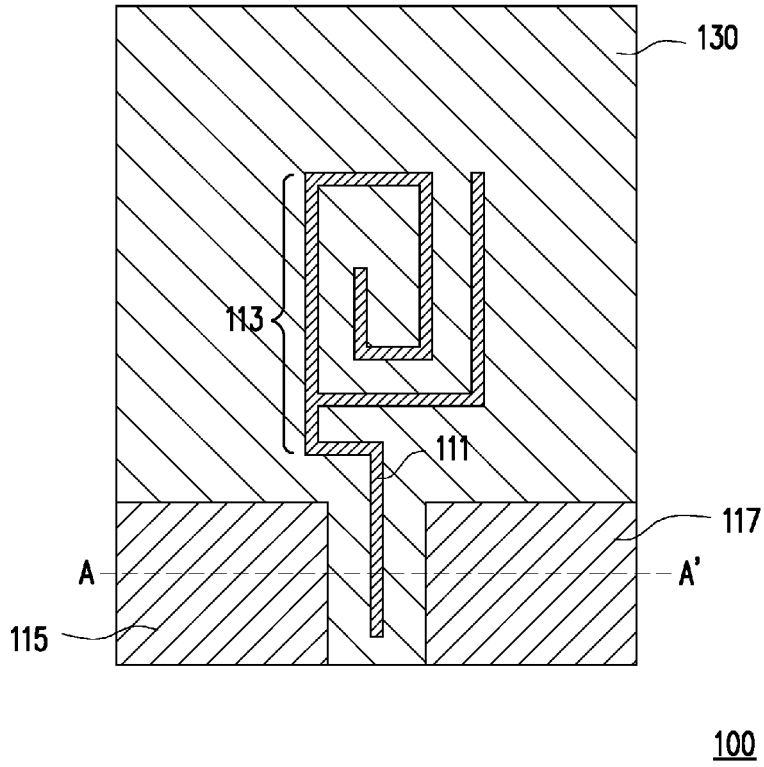
An antenna device and a printed circuit board are provided. The antenna device is adapted to transmit or receive a signal, and the antenna device includes an antenna dielectric layer, an antenna pattern, and a ground metal layer. The antenna dielectric layer has a first surface and a second surface opposite to each other, wherein a thickness of the antenna dielectric layer is n/4 times a wavelength of the signal, and n is an odd number. The antenna pattern is disposed on the first surface of the antenna dielectric layer. The ground metal layer is disposed on the second surface of the antenna dielectric layer and fully covers the second surface of the antenna dielectric layer.