US008294618B2

(12) **United States Patent**
Lee et al.

(10) **Patent No.: US 8,294,618 B2**
(45) **Date of Patent: Oct. 23, 2012**

(54) **MULTIBAND ANTENNA**

(75) Inventors: **Yi-Chieh Lee**, Tu-Cheng (TW); **Tun-Yuan Tsou**, Tu-Cheng (TW)

(73) Assignee: **Chi Mei Communication Systems, Inc.**, Tu-Cheng, New Taipei (TW)

(*) Notice: Subject to any disclaimer, the term of this patent is extended or adjusted under 35 U.S.C. 154(b) by 454 days.

(21) Appl. No.: **12/693,639**

(22) Filed: **Jan. 26, 2010**

(65) **Prior Publication Data**

US 2010/0277390 A1 Nov. 4, 2010

(30) **Foreign Application Priority Data**

Apr. 30, 2009 (CN) 2009 1 0302041

(51) **Int. Cl.**
H01Q 1/38 (2006.01)

(52) **U.S. Cl.** ..... **343/700 MS**; 343/702

(58) **Field of Classification Search** ..... 343/700 MS, 343/702, 846, 848
See application file for complete search history.

(56) **References Cited**

U.S. PATENT DOCUMENTS

5,903,240 A * 5/1999 Kawahata et al. ..... 343/700 MS
6,121,930 A * 9/2000 Grangeat et al. ..... 343/700 MS
6,784,843 B2 * 8/2004 Onaka et al. ..... 343/700 MS
7,126,544 B2 * 10/2006 Liu et al. ..... 343/700 MS

* cited by examiner

Primary Examiner — Hoanganh Le
(74) *Attorney, Agent, or Firm* — Altis Law Group, Inc.

(57) **ABSTRACT**

A multiband antenna includes a first antenna unit and a second antenna unit. The first antenna unit includes a first radio member and a second radio member connected to the first radio member. The second antenna unit includes a third radio member and a fourth radio member connected to the third radio member. The first antenna unit receives/sends wireless signals at relatively higher frequencies; the second antenna unit receives/sends wireless signals at relatively lower frequencies.

13 Claims, 3 Drawing Sheets

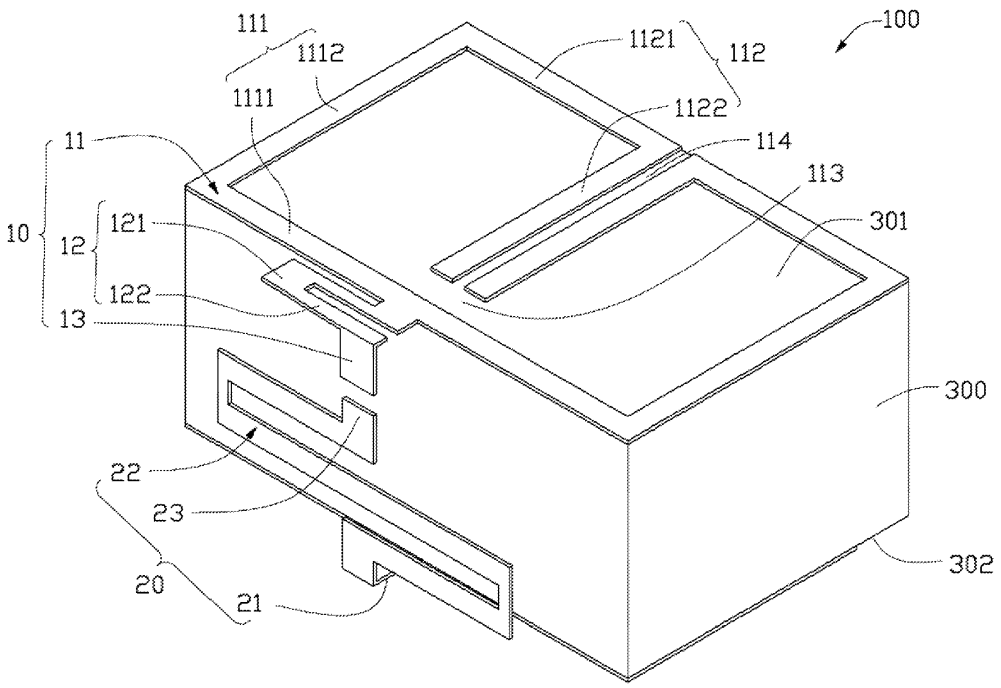

Acrobat 文件

US008294619B2

(12) **United States Patent**
Lee et al.

(10) **Patent No.: US 8,294,619 B2**
(45) **Date of Patent: Oct. 23, 2012**

(54) **UNSYMMETRICAL DUAL BAND ANTENNA**

(75) Inventors: **Chang-Jung Lee**, Taoyuan County (TW); **Jian-Jhih Du**, Taipei (TW)

(73) Assignee: **Arcadyan Technology Corporation**, Hsinchu (TW)

(*) Notice: Subject to any disclaimer, the term of this patent is extended or adjusted under 35 U.S.C. 154(b) by 303 days.

(21) Appl. No.: **12/805,771**

(22) Filed: **Aug. 19, 2010**

(65) **Prior Publication Data**

US 2011/0043410 A1 Feb. 24, 2011

(30) **Foreign Application Priority Data**

Aug. 19, 2009 (TW) ..... 98127886 A

(51) **Int. Cl.**
H01Q 1/38 (2006.01)

(52) **U.S. Cl.** ..... **343/700 MS**; 343/897; 343/860

(58) **Field of Classification Search** ..... 343/700 MS, 343/702, 863, 893, 897
See application file for complete search history.

(56) **References Cited**

U.S. PATENT DOCUMENTS

7,773,040	B2 *	8/2010	Rao et al.	343/729
7,911,392	B2 *	3/2011	Rao et al.	343/700 MS
8,044,863	B2 *	10/2011	Ali et al.	343/700 MS
2003/0103010	A1 *	6/2003	Boyle	343/702
2011/0309984	A1 *	12/2011	Chiu et al.	343/700 MS

* cited by examiner

Primary Examiner — Don Le
(74) *Attorney, Agent, or Firm* — Rabin & Berdo, P.C.

(57) **ABSTRACT**

An unsymmetrical dual-band antenna including a substrate, a first radiation unit, a second radiation unit and an impedance matching unit is provided. The substrate has a first surface and a second surface opposite to the first surface. The first radiation unit disposed on the first surface of the substrate includes first and second radiation portions connected to each other. The second radiation unit disposed on the first surface of the substrate includes third and fourth radiation portions connected to each other. The third radiation portion is disposed on the first surface of the substrate and adjacent to the first radiation portion. The impedance matching unit disposed on the second surface includes first to fourth patches. The first and the second patch are electrically connected to a feeding point. The third and the fourth patch are electrically connected to a ground point.

12 Claims, 6 Drawing Sheets

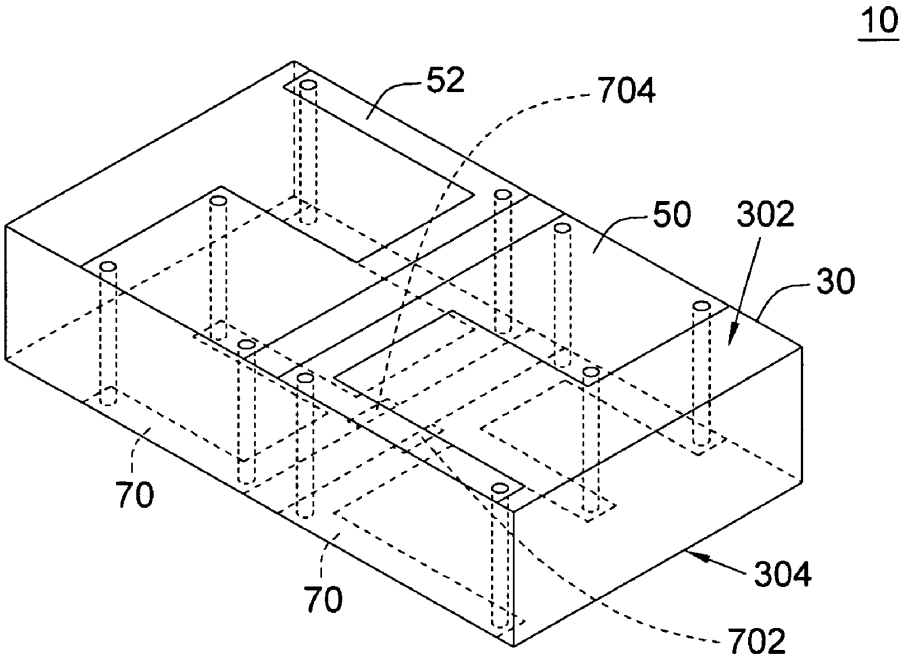

Acrobat 文件

US008294620B2

(12) **United States Patent**
Flint et al.

(10) **Patent No.: US 8,294,620 B2**
(45) **Date of Patent: *Oct. 23, 2012**

(54) **INTEGRATED DUAL-BAND ANTENNA FOR LAPTOP APPLICATIONS**

(75) Inventors: **Ephraim B. Flint**, Lincoln, MA (US); **Brian P. Gaucher**, Brookfield, CT (US); **Duixian Liu**, Yorktown Heights, NY (US)

(73) Assignee: **Lenovo (Singapore) Pte Ltd.**, Singapore (SG)

(*) Notice: Subject to any disclaimer, the term of this patent is extended or adjusted under 35 U.S.C. 154(b) by 212 days.

This patent is subject to a terminal disclaimer.

(21) Appl. No.: **10/370,976**

(22) Filed: **Feb. 20, 2003**

(65) **Prior Publication Data**

US 2003/0222823 A1 Dec. 4, 2003

Related U.S. Application Data

(63) Continuation-in-part of application No. 09/866,974, filed on May 29, 2001, now Pat. No. 6,686,886.

(51) **Int. Cl.**
H01Q 1/24 (2006.01)
H01Q 21/30 (2006.01)

(52) **U.S. Cl.** **343/702**; 343/725; 343/767; 343/846

(58) **Field of Classification Search** ..... 343/702, 343/700 MS, 846, 795, 713, 826, 828, 829, 343/725, 767

See application file for complete search history.

(56) **References Cited**

U.S. PATENT DOCUMENTS

4,131,892 A 12/1978 Munson et al.
4,131,893 A 12/1978 Munson et al.
4,367,475 A 1/1983 Schiavone
4,641,366 A * 2/1987 Yokoyama et al. 455/73
4,968,984 A * 11/1990 Katoh et al. 343/713
5,138,328 A * 8/1992 Zibrik et al. 343/702
5,365,246 A * 11/1994 Rasinger et al. 343/702
5,644,319 A * 7/1997 Chen et al. 343/702
5,677,698 A * 10/1997 Snowdon 343/770
6,057,801 A * 5/2000 Desclos et al. ..... 343/700 MS
6,184,833 B1 * 2/2001 Tran ..... 343/700 MS
6,307,520 B1 10/2001 Liu
6,339,400 B1 * 1/2002 Flint et al. 343/702
6,377,226 B1 * 4/2002 Ha et al. 343/791
6,539,207 B1 * 3/2003 del Castillo et al. 455/90.3

(Continued)

FOREIGN PATENT DOCUMENTS

EP 1011167 A1 10/1998

(Continued)

OTHER PUBLICATIONS

David Pogue, "The iBook: What Steve Jobs Didn't Say", in MacWorld on the web, pp. 1-3, Jul. 18, 1999.

(Continued)

Primary Examiner — Michael C Wimer
(74) *Attorney, Agent, or Firm* — Frank V. DeRosa, Esq

(57) **ABSTRACT**

Dual-band antennas that are embedded within portable devices such as laptop computers. In one aspect, a dual-band antenna for a portable device (e.g., laptop computer) includes a first element having a resonant frequency in a first frequency band and a second element having a resonant frequency in a second frequency band, wherein the first element is connected to a signal feed, wherein the second element is grounded, and wherein the first and second elements are integrated within a portable device.

20 Claims, 11 Drawing Sheets

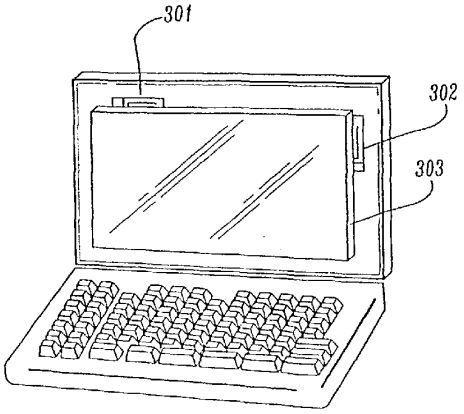

Acrobat 文件

US008294621B2

(12) **United States Patent**
Tran

(10) **Patent No.: US 8,294,621 B2**
(45) **Date of Patent: Oct. 23, 2012**

(54) **WIDEBAND ANTENNA FOR PORTABLE COMPUTERS**

(75) Inventor: **Allen Minh-Triet Tran**, San Diego, CA (US)

(73) Assignee: **QUALCOMM, Incorporated**, San Diego, CA (US)

(*) Notice: Subject to any disclaimer, the term of this patent is extended or adjusted under 35 U.S.C. 154(b) by 713 days.

(21) Appl. No.: **12/413,294**

(22) Filed: **Mar. 27, 2009**

(65) **Prior Publication Data**

US 2010/0245205 A1 Sep. 30, 2010

(51) **Int. Cl.**
H01Q 1/24 (2006.01)

(52) **U.S. Cl.** **343/702**; 343/876

(58) **Field of Classification Search** 343/702, 343/876

See application file for complete search history.

(56) **References Cited**

U.S. PATENT DOCUMENTS

8,159,399	B2 *	4/2012	Dorsey et al.	343/702
2006/0061512	A1	3/2006	Asano et al.	
2007/0164913	A1 *	7/2007	Sakamoto et al.	343/702
2008/0106476	A1 *	5/2008	Tran et al.	343/702

FOREIGN PATENT DOCUMENTS

EP	1739785	A1	1/2007
EP	1962372	A1	8/2008
EP	1962372	A1 *	8/2008

OTHER PUBLICATIONS

International Search Report and Written Opinion—PCT/US2010/028739, International Search Authority—European Patent Office—Jul. 21, 2010.

* cited by examiner

Primary Examiner — Jacob Y Choi
Assistant Examiner — Kyana R McCain
(74) *Attorney, Agent, or Firm* — Ramin Mobarhan

(57) **ABSTRACT**

A wideband antenna, for use in portable computers incorporating at least one wireless communication device, with improved radiated antenna efficiency across a broad range of operating frequency bands with minimal additional physical size or cost, is described. In an exemplary embodiment, the wideband antenna is defined by at least a first and second housing, where a first metal structure in at least a first one of the at least a first and second housings is commonly connected to at least two antenna RF feed ports at a boundary of the at least a first and second housing. In a further exemplary embodiment, the device is a portable computer, and the first housing is an upper display housing, the second housing includes a wireless communication device with at least two RF signal paths to at least two antenna RF feed ports, and the second housing further includes a second metal structure commonly connected to at least two antenna RF feed ports of the wideband antenna.

38 Claims, 4 Drawing Sheets

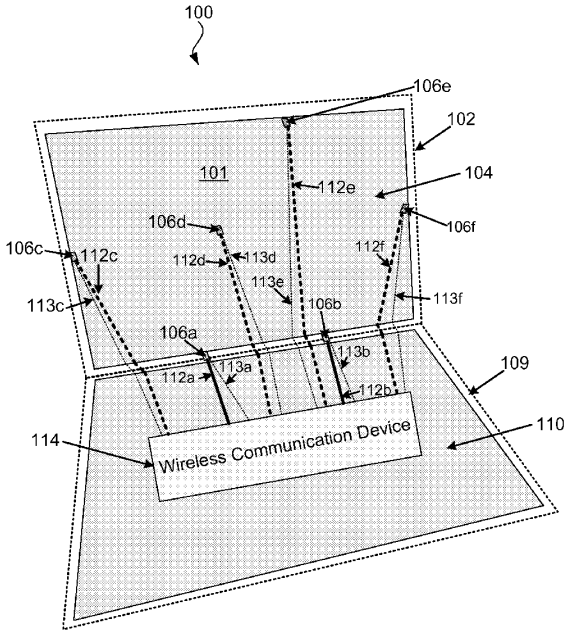

Acrobat 文件

US008294622B2

(12) **United States Patent**
Amari et al.

(10) **Patent No.: US 8,294,622 B2**
(45) **Date of Patent: Oct. 23, 2012**

(54) **ARRAY ANTENNA APPARATUS SUFFICIENTLY SECURING ISOLATION BETWEEN FEEDING ELEMENTS AND OPERATING AT FREQUENCIES**

(75) Inventors: **Satoru Amari**, Osaka (JP); **Atsushi Yamamoto**, Kyoto (JP); **Tsutomu Sakata**, Osaka (JP)

(73) Assignee: **Panasonic Corporation**, Osaka (JP)

(*) Notice: Subject to any disclaimer, the term of this patent is extended or adjusted under 35 U.S.C. 154(b) by 340 days.

(21) Appl. No.: **12/864,370**

(22) PCT Filed: **Nov. 9, 2009**

(86) PCT No.: **PCT/JP2009/005951**
§ 371 (c)(1),
(2), (4) Date: **Jul. 23, 2010**

(87) PCT Pub. No.: **WO2010/061541**
PCT Pub. Date: **Jun. 3, 2010**

(65) **Prior Publication Data**

US 2010/0295741 A1 Nov. 25, 2010

(30) **Foreign Application Priority Data**

Nov. 25, 2008 (JP) 2008-299185

(51) **Int. Cl.**
H01Q 1/24 (2006.01)

(52) **U.S. Cl.** **343/702**; 343/850

(58) **Field of Classification Search** ..... 343/702, 343/700 MS, 850, 876
See application file for complete search history.

(56) **References Cited**

U.S. PATENT DOCUMENTS

6,295,030 B1 * 9/2001 Kozakai et al. ..... 343/700 MS
6,771,223 B1 8/2004 Shoji et al.
6,894,648 B2 5/2005 Kozakai
7,554,497 B2 * 6/2009 Ohba et al. 343/702
(Continued)

FOREIGN PATENT DOCUMENTS

JP 2001-267841 9/2001
(Continued)

OTHER PUBLICATIONS

International Preliminary Report on Patentability and Written Opinion of the International Searching Authorities issued Jul. 14, 2011in corresponding International (PCT) Application No. PCT/JP2009/005951.

(Continued)

Primary Examiner — Hoang V Nguyen
(74) *Attorney, Agent, or Firm* — Wenderoth, Lind & Ponack, L.L.P.

(57) **ABSTRACT**

An array antenna apparatus includes a first antenna element resonating at a first frequency and a second antenna element resonating at the first frequency, and includes a first connecting line that connects the first connection point located in the first antenna element with a third connection point located in the second antenna element, and a second connecting line that connects the second connection point located in the first antenna element with a fourth connection point located in the second antenna element. Electrical lengths of the first and second antenna elements and those of the first and second connecting lines are set so that a phase difference, between first and second high-frequency signals respectively propagating through first and second signal paths, becomes substantially 180 degrees at the first feeding point, and then, the array antenna apparatus resonances at the first frequency and the second frequency.

19 Claims, 19 Drawing Sheets

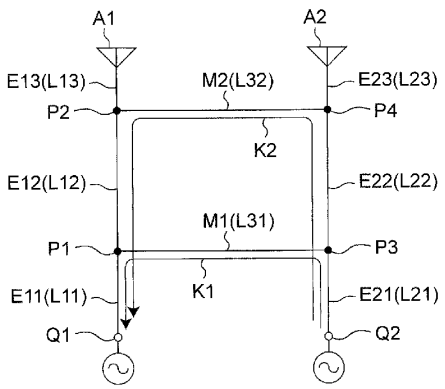

Acrobat 文件

US008294629B2

(12) **United States Patent**
Yosui et al.

(10) **Patent No.: US 8,294,629 B2**
(45) **Date of Patent: Oct. 23, 2012**

(54) **MAGNETIC ANTENNA AND ANTENNA DEVICE**

(75) Inventors: **Kuniaki Yosui**, Kanazawa (JP); **Hiroyuki Kubo**, Kanazawa (JP); **Hiromitsu Ito**, Hakusan (JP)

(73) Assignee: **Murata Manufacturing Co., Ltd.**, Kyoto (JP)

(*) Notice: Subject to any disclaimer, the term of this patent is extended or adjusted under 35 U.S.C. 154(b) by 323 days.

(21) Appl. No.: **12/507,272**

(22) Filed: **Jul. 22, 2009**

(65) **Prior Publication Data**

US 2010/0053014 A1 Mar. 4, 2010

(30) **Foreign Application Priority Data**

Aug. 29, 2008 (JP) 2008-220739

(51) **Int. Cl.**
H01Q 7/08 (2006.01)

(52) **U.S. Cl.** **343/788**; 343/895

(58) **Field of Classification Search** 343/788, 343/895

See application file for complete search history.

(56) **References Cited**

U.S. PATENT DOCUMENTS

2007/0247387	A1	10/2007	Kubo et al.
2008/0007473	A1	1/2008	Yosui et al.
2009/0096694	A1	4/2009	Ito et al.

FOREIGN PATENT DOCUMENTS

JP	2003-022912	A		1/2003
JP	2005-318329	A		11/2005
JP	2005-333244	A		12/2005
JP	3772778	B2		5/2006
JP	2008-035459	A		2/2008
JP	2008-035464	A		2/2008
JP	2008-048376	A		2/2008
JP	2008028642	A	*	2/2008

OTHER PUBLICATIONS

Official Communication issued in corresponding Japanese Patent Application No. 2008-220739, mailed on Nov. 29, 2011.

* cited by examiner

Primary Examiner — Dieu H Duong
(74) *Attorney, Agent, or Firm* — Keating & Bennett, LLP

(57) **ABSTRACT**

A highly sensitive magnetic antenna and an antenna device achieve strong coupling with magnetic flux substantially perpendicular to main surfaces of a magnetic core, an enlarged antenna opening, and increased efficiency of magnetic flux radiation. The magnetic antenna includes a flexible substrate and a magnetic core preferably having a substantially rectangular plate shape. The flexible substrate has a spiral coil conductor located thereon, and the coil conductor has a conductor opening located at the center of the winding center thereof. The flexible substrate is bent in the vicinity of the two sides of the coil conductor spaced apart from the center of the conductor opening and along the two sides of the magnetic core, so as to wrap around the upper surface, left and right surfaces, and portions of the lower surface of the magnetic core.

3 Claims, 7 Drawing Sheets

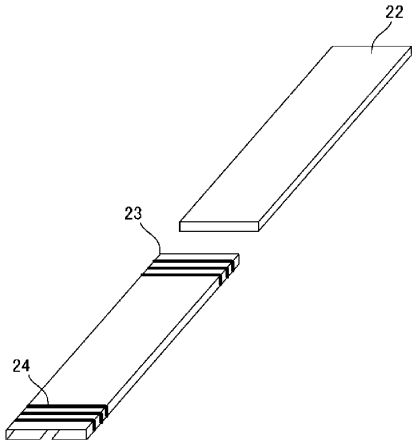

Acrobat 文件

US008294630B2

(12) **United States Patent**
Chen et al.

(10) **Patent No.: US 8,294,630 B2**
(45) **Date of Patent: Oct. 23, 2012**

(54) **ELECTRONIC DEVICE AND ANTENNA THEREOF**

(75) Inventors: **Huang-Chih Chen**, Taipei Hsien (TW); **Yung-Jinn Chen**, Taipei (TW)

(73) Assignee: **Wistron NeWeb Corp.**, Hsinchu (TW)

(*) Notice: Subject to any disclaimer, the term of this patent is extended or adjusted under 35 U.S.C. 154(b) by 581 days.

(21) Appl. No.: **12/431,582**

(22) Filed: **Apr. 28, 2009**

(65) **Prior Publication Data**

US 2010/0188297 A1 Jul. 29, 2010

(30) **Foreign Application Priority Data**

Jan. 23, 2009 (TW) ..... 98102829 A

(51) **Int. Cl.**

H01Q 9/16	(2006.01)
H01Q 9/26	(2006.01)
H01Q 9/28	(2006.01)
H01Q 1/38	(2006.01)
H01Q 1/24	(2006.01)

(52) **U.S. Cl.** . **343/793**; 343/803; 343/807; 343/700 MS; 343/702; 343/795

(58) **Field of Classification Search** ..... 343/702, 343/700 MS

See application file for complete search history.

(56) **References Cited**

U.S. PATENT DOCUMENTS

6,639,559	B2 *	10/2003	Okabe et al.	343/700 MS
7,126,545	B2 *	10/2006	Nagano et al.	343/702
7,382,319	B2 *	6/2008	Kawahata et al.	343/700 MS
2007/0200782	A1 *	8/2007	Hayama et al.	343/795

FOREIGN PATENT DOCUMENTS

KR	20020071779	9/2002
KR	20070077094	7/2007

* cited by examiner

Primary Examiner — Jacob Y Choi
Assistant Examiner — Graham Smith

(57) **ABSTRACT**

An antenna is provided. The antenna includes a signal line, a ground line, a first radiation element and a second radiation element. The first radiation element is electrically connected to the signal line. The first radiation element includes a first U-shaped section and a first extension section. The signal line is connected to an end of the first U-shaped section, and the first extension section is connected to the other end thereof. The first U-shaped section includes a first notch toward a first direction. The second radiation element is electrically connected to the ground line. The second radiation element includes a second U-shaped section and a second extension section. The ground line is connected to an end of the second U-shaped section, and the second extension section is connected to the other end thereof. The second U-shaped section includes a second notch toward the first direction.

15 Claims, 12 Drawing Sheets

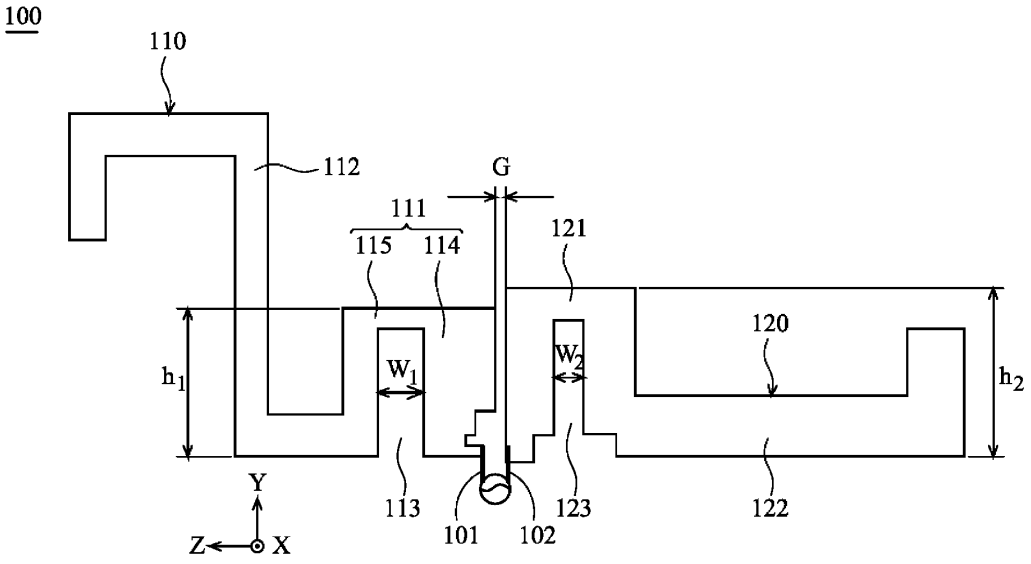

Acrobat 文件

US008294632B2

(12) **United States Patent**
Skarp

(10) **Patent No.: US 8,294,632 B2**
(45) **Date of Patent: Oct. 23, 2012**

(54) **ANTENNA INTERFACE CIRCUITS INCLUDING TUNABLE IMPEDANCE MATCHING NETWORKS, ELECTRONIC DEVICES INCORPORATING THE SAME, AND METHODS OF TUNING ANTENNA INTERFACE CIRCUITS**

(75) Inventor: **Filip Skarp**, Lund (SE)

(73) Assignee: **Sony Ericsson Mobile Communications AB**, Lund (SE)

(*) Notice: Subject to any disclaimer, the term of this patent is extended or adjusted under 35 U.S.C. 154(b) by 402 days.

(21) Appl. No.: **12/781,864**

(22) Filed: **May 18, 2010**

(65) **Prior Publication Data**

US 2011/0285603 A1 Nov. 24, 2011

(51) **Int. Cl.**
H01Q 1/50 (2006.01)
H03H 7/40 (2006.01)

(52) **U.S. Cl.** **343/860**; 343/861; 333/17.3

(58) **Field of Classification Search** 343/850, 343/860, 861; 333/17.3, 33
See application file for complete search history.

(56) **References Cited**

U.S. PATENT DOCUMENTS

4,485,360 A * 11/1984 Seward 333/17.3
5,195,045 A * 3/1993 Keane et al. 702/107
5,654,679 A * 8/1997 Mavretic et al. 333/17.3
5,842,154 A * 11/1998 Harnett 702/106
6,794,951 B2 * 9/2004 Finley 333/32
6,946,847 B2 * 9/2005 Nishimori et al. 324/600
7,298,091 B2 * 11/2007 Pickard et al. 315/111.51
2008/0106350 A1 5/2008 McKinzie

FOREIGN PATENT DOCUMENTS

WO WO 02/084868 A1 10/2002
WO WO 2008/129125 A1 10/2008

OTHER PUBLICATIONS

Bowick, Christopher, "What's in an RF Front End?", Newnes (a division of Elsevier), 2008, 2 pages.
European Search Report Corresponding to Application No. 11162309.6; Dated Aug. 17, 2011; 6 pages.

* cited by examiner

Primary Examiner — Don Le
(74) *Attorney, Agent, or Firm* — Myers Bigel Sibley & Sajovec

(57) **ABSTRACT**

An antenna interface circuit for a wireless communication device includes a tunable matching circuit that is coupleable to an antenna. The tunable matching circuit includes a variable impedance element having a variable impedance Ztune. The interface circuit further includes a fixed impedance element having a fixed impedance Zmeas, and a switch coupled to the fixed impedance element and configured to controllably switch the fixed impedance element into electrical communication with the tunable matching circuit. Related devices and methods are also disclosed.

20 Claims, 7 Drawing Sheets

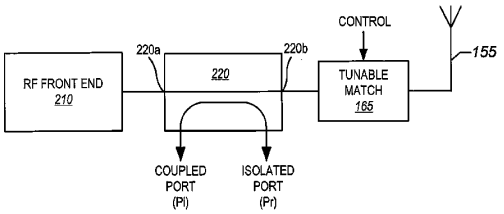

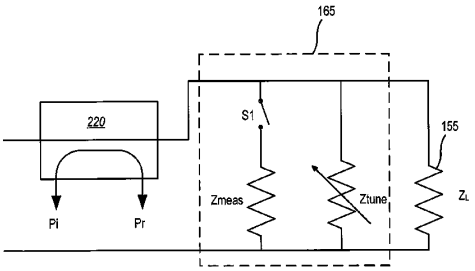

Acrobat 文件

US008299969B2

(12) **United States Patent**
Chang et al.

(10) **Patent No.: US 8,299,969 B2**
(45) **Date of Patent: Oct. 30, 2012**

(54) **MULTIBAND ANTENNA**

(75) Inventors: **Hao-Ying Chang**, Taoyuan (TW); **Yi-Hsien Weng**, Taoyuan (TW); **Cheng-Ang Lee**, Taoyuan (TW)

(73) Assignee: **FIH (Hong Kong) Limited**, Kowloon (HK)

(*) Notice: Subject to any disclaimer, the term of this patent is extended or adjusted under 35 U.S.C. 154(b) by 534 days.

(21) Appl. No.: **12/627,045**

(22) Filed: **Nov. 30, 2009**

(65) **Prior Publication Data**

US 2010/0245203 A1 Sep. 30, 2010

(30) **Foreign Application Priority Data**

Mar. 30, 2009 (CN) 2009 1 0301227

(51) **Int. Cl.**
H01Q 1/38 (2006.01)

(52) **U.S. Cl.** ..... **343/700 MS**; 343/702; 343/765; 343/764

(58) **Field of Classification Search** ..... None
See application file for complete search history.

(56) **References Cited**

U.S. PATENT DOCUMENTS

6,963,310	B2 *	11/2005	Horita et al.	343/702
2005/0055164	A1 *	3/2005	Neff et al.	702/14
2005/0280587	A1 *	12/2005	Svigelj et al.	343/702
2008/0198075	A1 *	8/2008	Yoshioka	343/700 MS
2011/0117976	A1 *	5/2011	Nishikido et al.	455/575.3

FOREIGN PATENT DOCUMENTS

CN	101779330 A		7/2010
WO	WO 2009/022385	*	2/2009

* cited by examiner

Primary Examiner — Trinh Dinh
(74) *Attorney, Agent, or Firm* — Altis Law Group, Inc.

(57) **ABSTRACT**

A multiband antenna includes a radio unit and a base circuit board. The radio unit includes a first radio member and a second radio member connected to the first radio member. The first radio member and the second radio member have similar shapes and sizes to each other and are aligned with each other. The base circuit board is connected to the second radio member to provide feed signals to the radio unit and connect the radio unit to the ground. The first radio member independently sends/receives wireless signals at a first frequency, and the second radio member is coupled with the first radio member, thereby cooperating with the first radio member to send/receive wireless signals at a second working frequency.

13 Claims, 3 Drawing Sheets

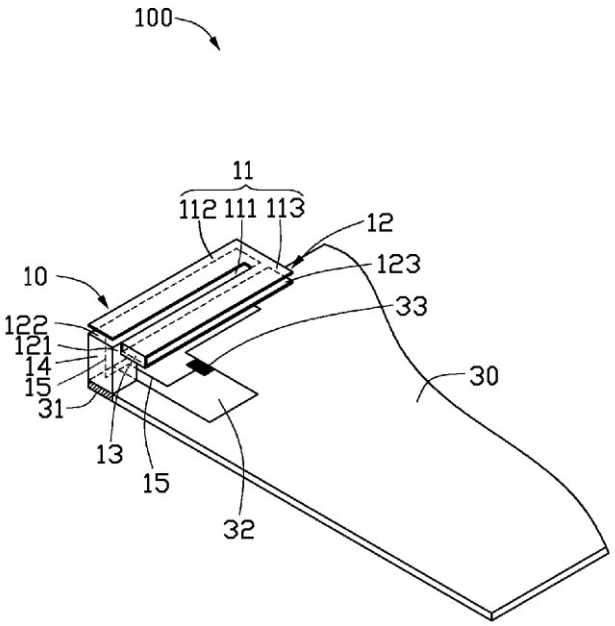

Acrobat 文件

US008299970B2

(12) **United States Patent**
Hsu et al.

(10) **Patent No.: US 8,299,970 B2**
(45) **Date of Patent: Oct. 30, 2012**

(54) **DUAL ANTENNA DEVICE**

(75) Inventors: **Chieh-Sheng Hsu**, Taipei Hsien (TW); **Chang-Hsiu Huang**, Taipei Hsien (TW)

(73) Assignee: **Wistron NeWeb Corporation**, Hsi-Chih, Taipei Hsien (TW)

(*) Notice: Subject to any disclaimer, the term of this patent is extended or adjusted under 35 U.S.C. 154(b) by 413 days.

(21) Appl. No.: **12/783,525**

(22) Filed: **May 19, 2010**

(65) **Prior Publication Data**

US 2010/0328160 A1 Dec. 30, 2010

(30) **Foreign Application Priority Data**

Jun. 30, 2009 (TW) ..... 98122033 A

(51) **Int. Cl.**
H01Q 1/38 (2006.01)

(52) **U.S. Cl.** ..... **343/700 MS**; 343/893

(58) **Field of Classification Search** ..... 343/711, 343/712, 770, 846, 893, 700 MS
See application file for complete search history.

(56) **References Cited**

U.S. PATENT DOCUMENTS

4,401,988	A *	8/1983	Kaloi	343/700 MS
5,121,127	A *	6/1992	Toriyama	343/700 MS
6,639,558	B2 *	10/2003	Kellerman et al.	343/700 MS
6,850,191	B1 *	2/2005	Thill et al.	343/700 MS
7,489,280	B2 *	2/2009	Aminzadeh et al.	343/713
7,936,306	B2 *	5/2011	Mierke et al.	343/700 MS
8,111,196	B2 *	2/2012	Thiam et al.	343/700 MS
2004/0066338	A1 *	4/2004	Chen et al.	343/700 MS

* cited by examiner

Primary Examiner — Don Le
(74) *Attorney, Agent, or Firm* — Winston Hsu; Scott Margo

(57) **ABSTRACT**

A dual antenna device includes a first antenna of a first polarization, a second antenna of a second polarization, and a conducting wall. The first antenna includes a grounding unit, a first substrate positioned on the grounding unit, a first radiating unit positioned on the first substrate, and a first feeding unit coupled to the first radiating unit. The conducting wall is coupled to the grounding unit and the first radiating unit, and forms a space above the grounding unit. The second antenna includes a second radiating unit and a second feeding unit coupled to the second radiating unit and placed through the space.

16 Claims, 11 Drawing Sheets

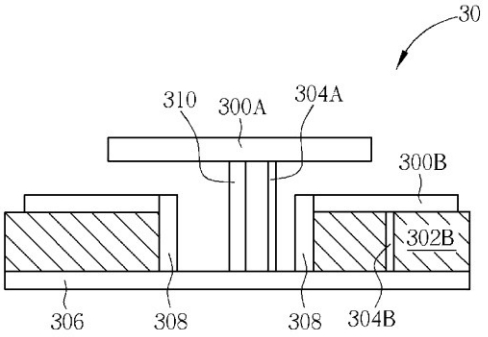

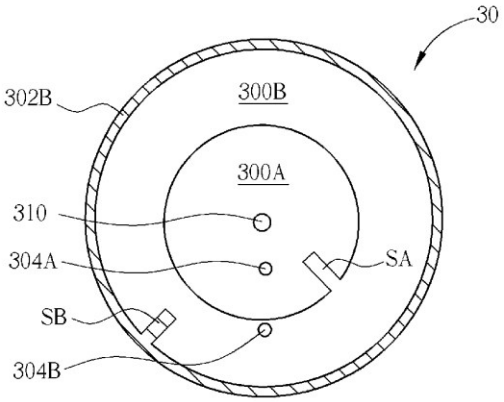

Acrobat 文件

US008299971B2

(12) **United States Patent**
Talty et al.

(10) **Patent No.: US 8,299,971 B2**
(45) **Date of Patent: Oct. 30, 2012**

(54) **CONTROL MODULE CHASSIS-INTEGRATED SLOT ANTENNA**

(75) Inventors: **Timothy J. Talty**, Beverly Hills, MI (US); **Rod Niner**, Royal Oak, MI (US); **Fred W. Huntzicker**, Ann Arbor, MI (US)

(73) Assignee: **GM Global Technology Operations LLC**, Detroit, MI (US)

(*) Notice: Subject to any disclaimer, the term of this patent is extended or adjusted under 35 U.S.C. 154(b) by 287 days.

(21) Appl. No.: **12/727,298**

(22) Filed: **Mar. 19, 2010**

(65) **Prior Publication Data**

US 2010/0245184 A1 Sep. 30, 2010

Related U.S. Application Data

(60) Provisional application No. 61/163,385, filed on Mar. 25, 2009.

(51) **Int. Cl.**
H01Q 1/24 (2006.01)
H01Q 13/10 (2006.01)

(52) **U.S. Cl.** **343/702**; 343/767

(58) **Field of Classification Search** 343/702, 343/767

See application file for complete search history.

(56) **References Cited**

U.S. PATENT DOCUMENTS

4,123,756 A		10/1978	Nagata et al.	
5,642,120 A	*	6/1997	Fujisawa	343/702
5,757,326 A	*	5/1998	Koyama et al.	343/702
5,940,041 A	*	8/1999	Koyama et al.	343/702
6,879,293 B2		4/2005	Sato	
2005/0146475 A1	*	7/2005	Bettner et al.	343/767
2007/0194994 A1		8/2007	Waltho	
2009/0153410 A1	*	6/2009	Chiang et al.	343/702

FOREIGN PATENT DOCUMENTS

DE	000T0010432 MA	8/1956
DE	1802767 U	12/1959
DE	3904676 A1	8/1990
DE	4000381 A1	7/1991
DE	19628125 A1	1/1998
DE	20080128 U1	5/2001
DE	202004017672 U1	3/2005
EP	0878040 B1	10/1999

(Continued)

OTHER PUBLICATIONS

IEEE Computer Society, Wireless Medium Access Control (MAC) and Physical Layer (PHY) Specifications for Wireless Personal Area Networks (WPANs), IEEE Standard for Information Technology—Telecommunications and Information Exchange between Systems—Local and Metropolitan Area Networks—Specific Requirements, Norm IEEE 802.15.1, Jun. 14, 2005, New York, NY.

(Continued)

Primary Examiner — Jacob Y Choi
Assistant Examiner — Hasan Islam

(57) **ABSTRACT**

A control module has a conductive metal chassis with a chassis body and a chassis lid. A non-conductive opening is formed within the chassis body and a tab extends from the chassis lid engaging edges of the non-conductive opening to create a rectangularly-shaped non-conductive aperture with a longitudinal axis having a predetermined length for forming a slot antenna structure. The predetermined length is designed to communicate with a specific communications frequency. The slot antenna structure is signally interconnected to a transceiver housed within the chassis.

20 Claims, 3 Drawing Sheets

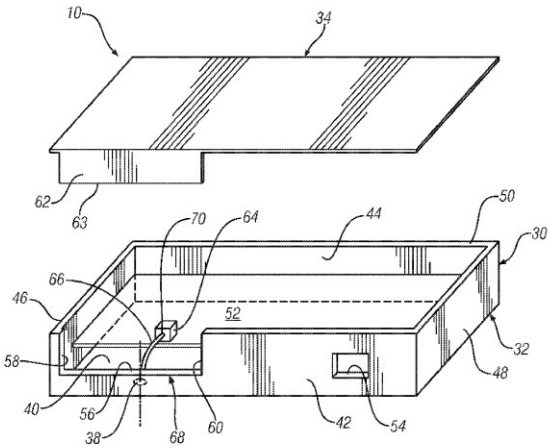

Acrobat 文件

US008299972B2

(12) **United States Patent**
Lai

(10) **Patent No.: US 8,299,972 B2**
(45) **Date of Patent: Oct. 30, 2012**

(54) **ANTENNA FOR PORTABLE DEVICE**

(75) Inventor: **Chih-Hung Lai**, Tu-Cheng (TW)

(73) Assignee: **Chi Mei Communication Systems, Inc.**, Tu-Cheng, New Taipei (TW)

(*) Notice: Subject to any disclaimer, the term of this patent is extended or adjusted under 35 U.S.C. 154(b) by 347 days.

(21) Appl. No.: **12/844,031**

(22) Filed: **Jul. 27, 2010**

(65) **Prior Publication Data**

US 2011/0215980 A1 Sep. 8, 2011

(30) **Foreign Application Priority Data**

Mar. 2, 2010 (TW) ..... 99105997 A

(51) **Int. Cl.**
H01Q 1/24 (2006.01)
H01Q 1/38 (2006.01)

(52) **U.S. Cl.** ..... **343/702**; 343/700 MS

(58) **Field of Classification Search** ..... 343/702, 343/700 MS, 770
See application file for complete search history.

(56) **References Cited**

U.S. PATENT DOCUMENTS

2010/0090912 A1* 4/2010 Lin et al. 343/702
2011/0109515 A1* 5/2011 Rao 343/702
2011/0156964 A1* 6/2011 Lin et al. 343/702

* cited by examiner

Primary Examiner — Hoang V Nguyen
(74) *Attorney, Agent, or Firm* — Altis Law Group, Inc.

(57) **ABSTRACT**

The disclosure provides an antenna used for a portable device. The antenna includes a feed part, a ground part, a bent part, a main body, and an extended part. The main body connects with the feed part and the ground part. The main body further includes several gaps and slots so that the main body is divided into several radiating areas by the gaps and slots. The bent part is extended from the ground part. The extended part perpendicularly connects with the main body.

13 Claims, 3 Drawing Sheets

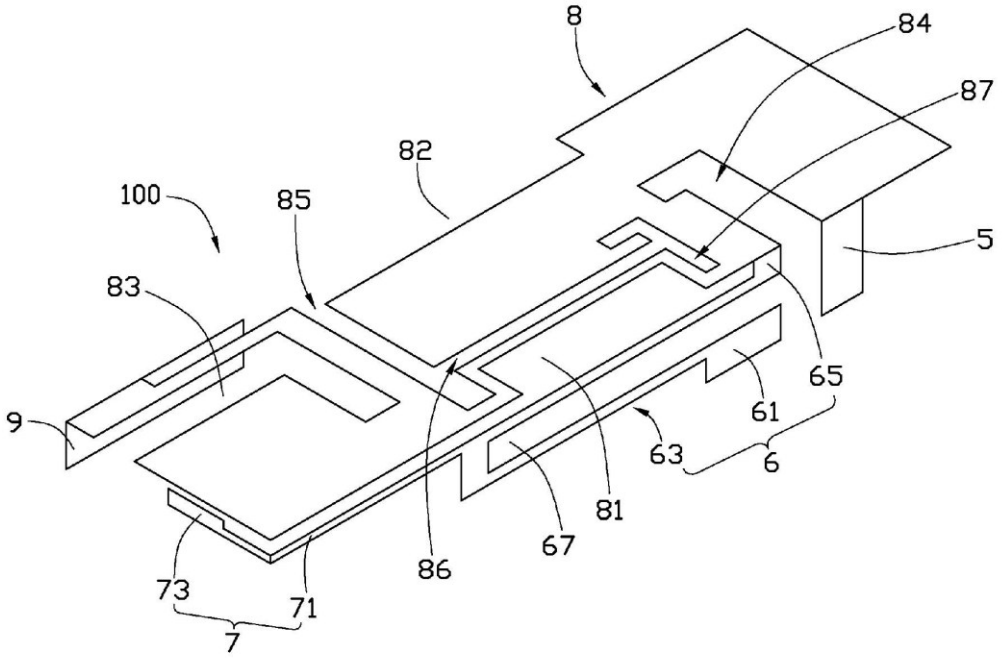

This PDF of U.S. Utility Patent 8299972 provided by Patent Fetcher™, a product of Stroke of Color, Inc. - Page 1 of 6

Acrobat 文件

US008301212B2

(12) **United States Patent**
Matsuda

(10) **Patent No.: US 8,301,212 B2**
(45) **Date of Patent: Oct. 30, 2012**

(54) **PORTABLE WIRELESS APPARATUS AND ANTENNA STRUCTURE**

(75) Inventor: **Satoshi Matsuda**, Kanagawa (JP)

(73) Assignee: **KYOCERA Corporation**, Kyoto (JP)

(*) Notice: Subject to any disclaimer, the term of this patent is extended or adjusted under 35 U.S.C. 154(b) by 1095 days.

(21) Appl. No.: **12/182,729**

(22) Filed: **Jul. 30, 2008**

(65) **Prior Publication Data**

US 2009/0061967 A1 Mar. 5, 2009

(30) **Foreign Application Priority Data**

Jul. 30, 2007 (JP) 2007-198186

(51) **Int. Cl.**
H04M 1/00 (2006.01)

(52) **U.S. Cl.** **455/575.7**; 455/575.5

(58) **Field of Classification Search** 455/550.1, 455/575.1, 575.5, 90.2, 90.3, 350; 379/433.01, 379/433.03; 343/702, 904, 906, 907, 908
See application file for complete search history.

(56) **References Cited**

U.S. PATENT DOCUMENTS

7,274,340 B2 * 9/2007 Ozden et al. 343/860
7,369,883 B2 * 5/2008 Kori et al. 455/575.3
7,750,854 B2 * 7/2010 Wedel et al. 343/702
2002/0142794 A1 * 10/2002 Harano 455/550
2006/0049988 A1 * 3/2006 Kim et al. ..... 343/700 MS
2007/0066274 A1 * 3/2007 Kim 455/350

FOREIGN PATENT DOCUMENTS

JP 1999-177485 2/1999
JP 2001-284934 3/2002
JP 2003-338769 11/2003

* cited by examiner

Primary Examiner — Wesley Kim
(74) *Attorney, Agent, or Firm* — Procopio, Cory, Hargreaves & Savitch LLP

(57) **ABSTRACT**

A portable wireless apparatus includes a casing, an antenna and another electronic component. The antenna is contained in an end portion of the casing. The antenna includes a first and second antenna element, an antenna board and a antenna connector. The antenna board has a mounting face on which the first and second antenna elements are mounted. The antenna connector is formed on the antenna board and connects the first antenna element to the second antenna element. A predetermined space is provided between the first and second antenna elements. The other electronic component is disposed so as not to overlap the antenna connector in a direction orthogonal to the mounting face of the antenna board, and at least part of the other electronic component is disposed in the predetermined space.

1 Claim, 6 Drawing Sheets

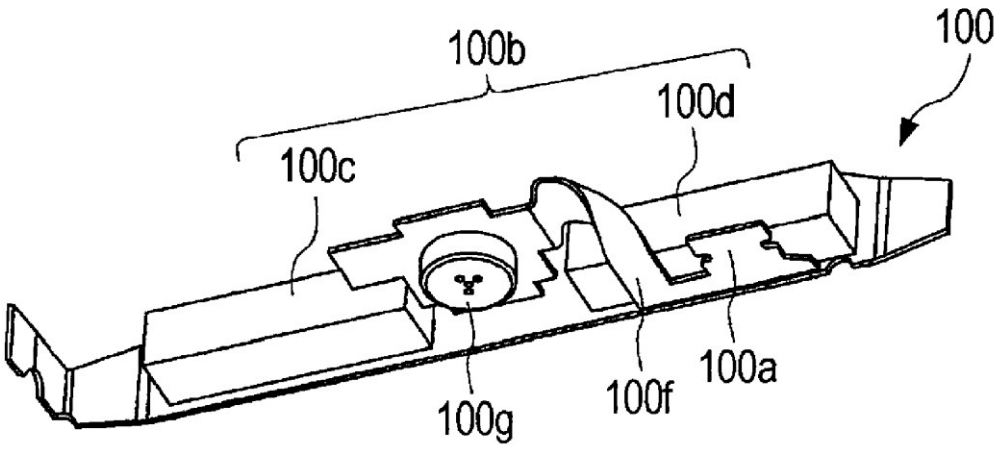

Acrobat 文件

US008305272B2

(12) **United States Patent**
Chiang

(10) **Patent No.: US 8,305,272 B2**
(45) **Date of Patent: Nov. 6, 2012**

(54) **MULTI-BAND ANTENNA STRUCTURE**

(75) Inventor: **Chi-Ming Chiang**, Bade (TW)

(73) Assignee: **Auden Techno Corp.**, Taoyuan County (TW)

(*) Notice: Subject to any disclaimer, the term of this patent is extended or adjusted under 35 U.S.C. 154(b) by 301 days.

(21) Appl. No.: **12/832,401**

(22) Filed: **Jul. 8, 2010**

(65) **Prior Publication Data**

US 2012/0007780 A1 Jan. 12, 2012

(51) **Int. Cl.**
H01Q 1/32 (2006.01)

(52) **U.S. Cl.** ..... **343/700 MS**

(58) **Field of Classification Search** ..... 343/700 MS, 343/745, 702, 846, 895, 767
See application file for complete search history.

(56) **References Cited**

U.S. PATENT DOCUMENTS

7,602,343 B2 * 10/2009 Takada et al. 343/702
7,911,387 B2 * 3/2011 Hill et al. ..... 343/700 MS
8,013,796 B2 * 9/2011 Liu et al. 343/702
8,054,229 B2 * 11/2011 Kaneoya 343/702
8,085,208 B2 * 12/2011 Wallace 343/749
2004/0257283 A1 * 12/2004 Asano et al. 343/702
2008/0048799 A1 * 2/2008 Wang et al. 333/156

* cited by examiner

Primary Examiner — Huedung Mancuso
(74) *Attorney, Agent, or Firm* — Houtteman Law LLC

(57) **ABSTRACT**

A multi-band antenna structure includes a substrate having a first surface and a second surface that is opposite to the first surface, a first metal strip and a second metal strip formed on the first surface, a third metal strip formed on the second surface, and a metal part located on the substrate. The first metal strip has a first strip and a second strip and the second strip has an inductance characteristic. The first strip of the first metal strip and the third metal strip define a first overlap area in the direction vertical to the substrate. The first overlap area has a first capacitor characteristic. The second metal strip and the third metal strip define a second overlap area in the direction vertical to the substrate. The second overlap area has a second capacitor characteristic.

10 Claims, 2 Drawing Sheets

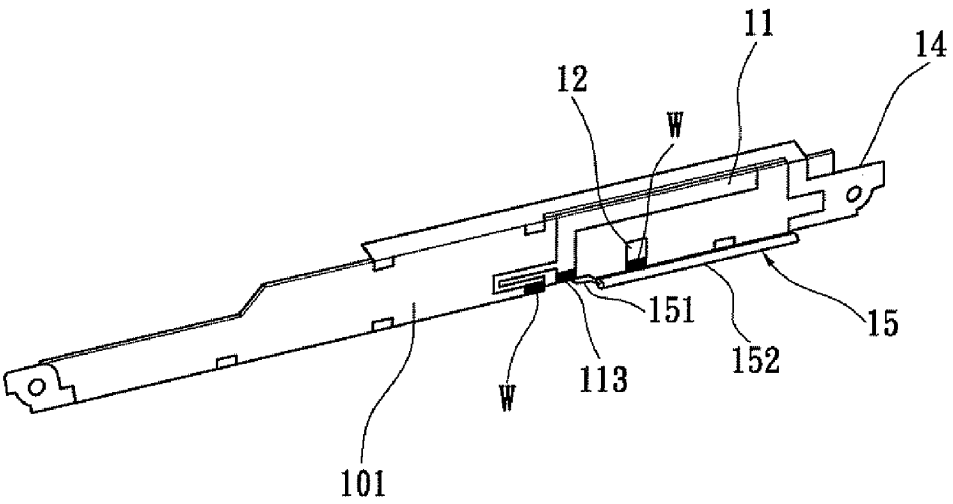

Acrobat 文件

US008305273B2

(12) **United States Patent**
Cheng et al.

(10) **Patent No.: US 8,305,273 B2**
(45) **Date of Patent: Nov. 6, 2012**

(54) **DUAL-BAND DUAL-ANTENNA STRUCTURE**

(75) Inventors: **Shih-Chieh Cheng**, Tainan County (TW); **Hsin-Chieh Peng**, Miaoli County (TW)

(73) Assignee: **Arcadyan Technology Corporation**, Hsinchu (TW)

(*) Notice: Subject to any disclaimer, the term of this patent is extended or adjusted under 35 U.S.C. 154(b) by 327 days.

(21) Appl. No.: **12/857,033**

(22) Filed: **Aug. 16, 2010**

(65) **Prior Publication Data**

US 2011/0037660 A1 Feb. 17, 2011

(30) **Foreign Application Priority Data**

Aug. 14, 2009 (TW) ..... 98127427 A

(51) **Int. Cl.**
H01Q 5/00 (2006.01)

(52) **U.S. Cl.** ..... **343/700 MS**; 343/893; 343/904; 343/908

(58) **Field of Classification Search** ..... 343/700 MS, 343/893, 904, 907–908
See application file for complete search history.

(56) **References Cited**

U.S. PATENT DOCUMENTS

7,057,565	B1 *	6/2006	Liu	343/700 MS
7,586,448	B2 *	9/2009	Wei	343/702
2008/0191957	A1 *	8/2008	Chang	343/845
2008/0316111	A1 *	12/2008	Aoyama et al.	343/700 MS
2010/0039330	A1 *	2/2010	Chien et al.	343/700 MS
2010/0045564	A1 *	2/2010	Chih-Yung et al.	343/893

* cited by examiner

Primary Examiner — Jason M Crawford
(74) *Attorney, Agent, or Firm* — Rabin & Berdo, P.C.

(57) **ABSTRACT**

A dual-band dual-antenna structure is provided. The dual-band dual-antenna structure comprises a substrate, a first antenna and a second antenna. The substrate comprises a first signal transport layer and a second signal transport layer, wherein the second signal transport layer is not coplanar with the first signal transport layer. The first antenna is disposed on the first signal transport layer and comprises a first U-shaped radiation element and a first polygon radiation element. The first polygon radiation element is disposed in an opening of the first U-shaped radiation element. The second antenna is disposed on the second signal transport layer but does not overlap under the first antenna. The second antenna comprises a second U-shaped radiation element and a second polygon radiation element. The second polygon radiation element is disposed in an opening of the second U-shaped radiation element.

19 Claims, 39 Drawing Sheets

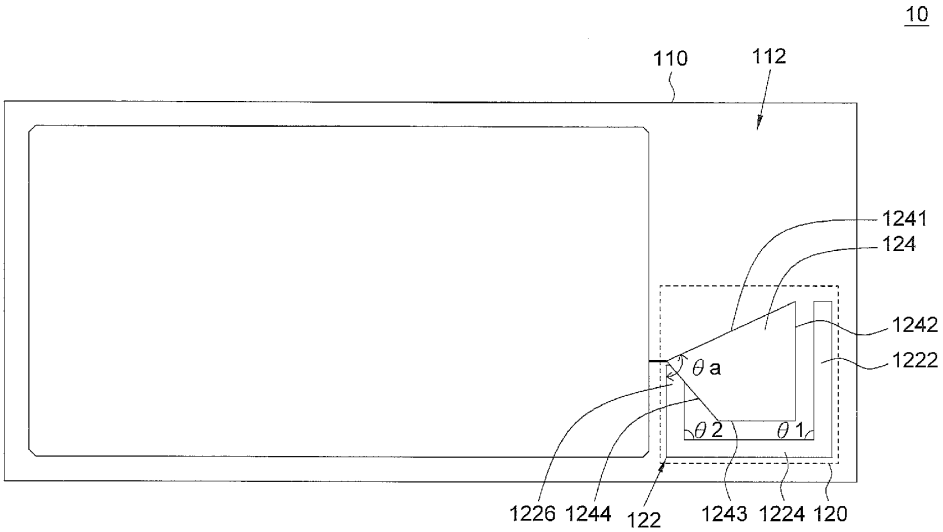

Acrobat 文件

US008305274B2

(12) **United States Patent**
Shim et al.

(10) **Patent No.: US 8,305,274 B2**
(45) **Date of Patent: Nov. 6, 2012**

(54) **INTERNAL ANTENNA FOR MITIGATING EFFECT OF ELECTROMAGNETIC WAVES ON HUMAN BODY USING COUPLING**

(75) Inventors: **Bu-Seok Shim**, Gwangmyeong-si (KR); **Soon-Jong So**, Anyang-si (KR)

(73) Assignee: **Ace Antenna Corp.**, Incheon (KR)

(*) Notice: Subject to any disclaimer, the term of this patent is extended or adjusted under 35 U.S.C. 154(b) by 538 days.

(21) Appl. No.: **12/610,013**

(22) Filed: **Oct. 30, 2009**

(65) **Prior Publication Data**

US 2010/0109954 A1 May 6, 2010

(30) **Foreign Application Priority Data**

Nov. 4, 2008 (KR) 10-2008-0108806

(51) **Int. Cl.**
H01Q 1/24 (2006.01)

(52) **U.S. Cl.** **343/702**; 343/841

(58) **Field of Classification Search** 343/702, 343/841

See application file for complete search history.

(56) **References Cited**

U.S. PATENT DOCUMENTS

6,031,494	A *	2/2000	Okabe et al.	343/702
6,417,817	B1 *	7/2002	Pirila et al.	343/841
6,590,539	B2 *	7/2003	shinichi	343/702
2004/0032371	A1 *	2/2004	Mendolia et al.	343/702
2004/0119654	A1 *	6/2004	Koyama	343/846
2008/0207282	A1 *	8/2008	Schaffler	455/575.3

* cited by examiner

Primary Examiner — Tho G Phan

(74) *Attorney, Agent, or Firm* — LRK Patent Law Firm

(57) **ABSTRACT**

Disclosed herein is an internal antenna capable of mitigating the effect of electromagnetic waves on a human body using coupling. The internal antenna includes an antenna pattern part and a conductive conductor pattern. The antenna pattern part is form on the Printed Circuit Board (PCB) of a mobile communication terminal. The conductive conductor pattern is formed in a predetermined pattern on one side surface of a cover which covers the antenna pattern part. Coupling occurs between the antenna pattern part formed on the PCB and the conductive conductor pattern formed in a predetermined pattern on one side surface of the cover, so that current components are transferred from the antenna pattern part to the conductive conductor pattern.

5 Claims, 8 Drawing Sheets

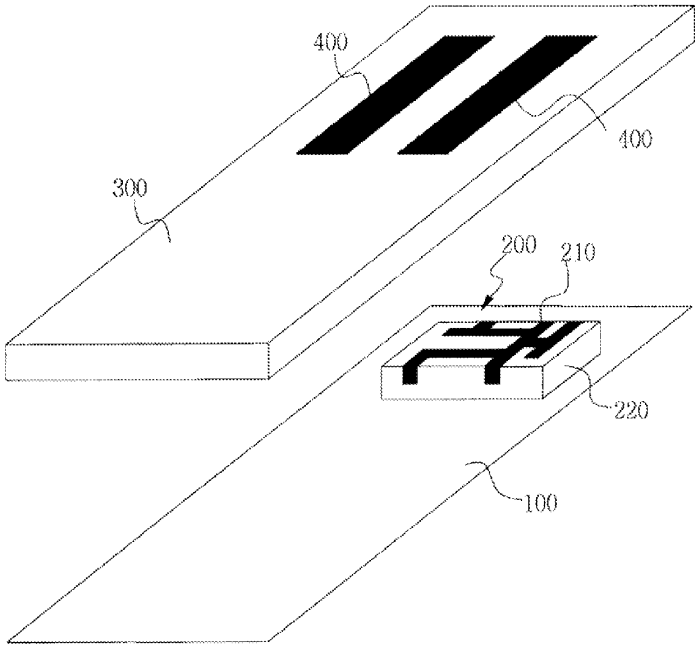

Acrobat 文件

US008305275B2

(12) **United States Patent**
Man et al.

(10) **Patent No.: US 8,305,275 B2**
(45) **Date of Patent: *Nov. 6, 2012**

(54) **MOBILE WIRELESS COMMUNICATIONS DEVICE HAVING DIVERSITY ANTENNA SYSTEM AND RELATED METHODS**

(75) Inventors: **Ying Tong Man**, Waterloo (CA); **Adrian Cooke**, Kitchener (CA); **Yihong Qi**, St. Agatha (CA); **Joshua Wong**, Waterloo (CA)

(73) Assignee: **Research In Motion Limited**, Waterloo, Ontario (CA)

(*) Notice: Subject to any disclaimer, the term of this patent is extended or adjusted under 35 U.S.C. 154(b) by 0 days.

This patent is subject to a terminal disclaimer.

(21) Appl. No.: **13/337,353**

(22) Filed: **Dec. 27, 2011**

(65) **Prior Publication Data**

US 2012/0100886 A1 Apr. 26, 2012

Related U.S. Application Data

(63) Continuation of application No. 12/365,908, filed on Feb. 5, 2009, now Pat. No. 8,106,838.

(51) **Int. Cl.**
H01Q 21/00 (2006.01)
H01Q 3/24 (2006.01)

(52) **U.S. Cl.** **343/702**; 343/853; 343/876

(58) **Field of Classification Search** 343/702, 343/853, 876; 455/101, 277.1, 575.7
See application file for complete search history.

(56) **References Cited**

U.S. PATENT DOCUMENTS

5,392,054	A	2/1995	Bottomley et al.	343/702
7,126,545	B2	10/2006	Nagano et al.	343/702
7,353,013	B2	4/2008	Qi et al.	455/278.1
7,369,091	B2	5/2008	Man et al.	343/702
7,372,406	B2 *	5/2008	Shiotsu et al.	343/700 MS
7,379,027	B2	5/2008	Kezys et al.	343/702
8,106,838	B2 *	1/2012	Man et al.	343/702
2005/0136906	A1	6/2005	Azuma	455/418
2006/0178116	A1	8/2006	Qi et al.	455/90.3
2007/0052599	A1 *	3/2007	Shimizu et al.	343/702
2008/0007468	A1	1/2008	Sato et al.	343/702
2008/0188183	A1	8/2008	Dwyer et al.	455/67.7
2010/0194647	A1	8/2010	Man et al.	343/702

FOREIGN PATENT DOCUMENTS

EP	1763152	3/2007
WO	01/47126	6/2001
WO	2007/025309	3/2007

* cited by examiner

Primary Examiner — Jacob Y Choi
Assistant Examiner — Hasan Islam
(74) *Attorney, Agent, or Firm* — Allen, Dyer, Doppelt, Milbrath & Gilchrist, P.A. Attorneys at Law

(57) **ABSTRACT**

A mobile wireless communications device has a portable handheld housing. A circuit board is carried by the portable handheld housing. RF circuitry is carried by the circuit board. A diversity antenna and main antenna are carried by the portable handheld housing and coupled to the RF circuitry and operative together. The RF circuitry tunes the diversity antenna into a diversity communications frequency band to achieve a diversity mode of operation with the main antenna and tunes the diversity antenna into a non-diversity communications frequency band when cross-coupling has occurred from the diversity antenna to the main antenna when operating in the diversity communications frequency band. A switch is carried by the portable handheld housing and connected to the RF circuitry and coupled between the diversity and main antennae and disconnects the diversity antenna when operating in the non-diversity band to prevent cross-coupling from the diversity antenna to the main antenna.

16 Claims, 6 Drawing Sheets

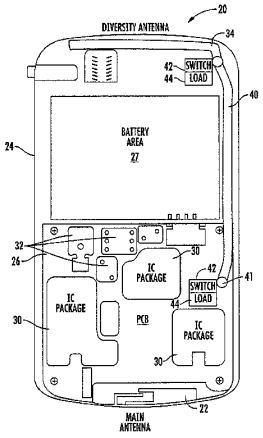

Acrobat 文件

US008305284B2

(12) **United States Patent**
Tai et al.

(10) **Patent No.: US 8,305,284 B2**
(45) **Date of Patent: Nov. 6, 2012**

(54) **ANTENNA ASSEMBLY WITH THREE-DIMENSION CONNECTING ELEMENT**

(75) Inventors: **Lung-Sheng Tai**, Tu-Cheng (TW); **Po-Kang Ku**, Tu-Cheng (TW)

(73) Assignee: **Hon Hai Precision Ind. Co., Ltd.**, New Taipei (TW)

(*) Notice: Subject to any disclaimer, the term of this patent is extended or adjusted under 35 U.S.C. 154(b) by 450 days.

(21) Appl. No.: **12/619,694**

(22) Filed: **Nov. 17, 2009**

(65) **Prior Publication Data**

US 2010/0123639 A1 May 20, 2010

(30) **Foreign Application Priority Data**

Nov. 17, 2008 (TW) ..... 97144311 A

(51) **Int. Cl.**
H01Q 1/48 (2006.01)
H01Q 1/38 (2006.01)

(52) **U.S. Cl.** ..... **343/846**; 343/700 MS; 343/829; 343/702

(58) **Field of Classification Search** ..... None
See application file for complete search history.

(56) **References Cited**

U.S. PATENT DOCUMENTS

7,161,543	B2	1/2007	Cheng et al.	
7,339,536	B2	3/2008	Hung et al.	
7,525,490	B2	4/2009	Hung et al.	
7,973,726	B2 *	7/2011	Tseng et al.	343/702
8,013,793	B2 *	9/2011	Hung et al.	343/700 MS
2006/0262016	A1 *	11/2006	Hung et al.	343/702
2007/0120753	A1 *	5/2007	Hung et al.	343/702

* cited by examiner

Primary Examiner — Trinh Dinh

(74) *Attorney, Agent, or Firm* — Wei Te Chung; Ming Chieh Chang

(57) **ABSTRACT**

An antenna assembly includes a grounding element with a first edge and a second edge, a first antenna and a second antenna. The first antenna and the second antenna respectively extend from the first side edge and the second side edge of the grounding element, and each includes a connecting element with an opening, a radiating element upward extending from the connecting element and a feeding line. The two openings of the two antennas respectively face two opposite directions. The radiating element of the first antenna is above the second side edge of the grounding element, and the radiating element of the second antenna is above the first side edge of the grounding element.

17 Claims, 3 Drawing Sheets

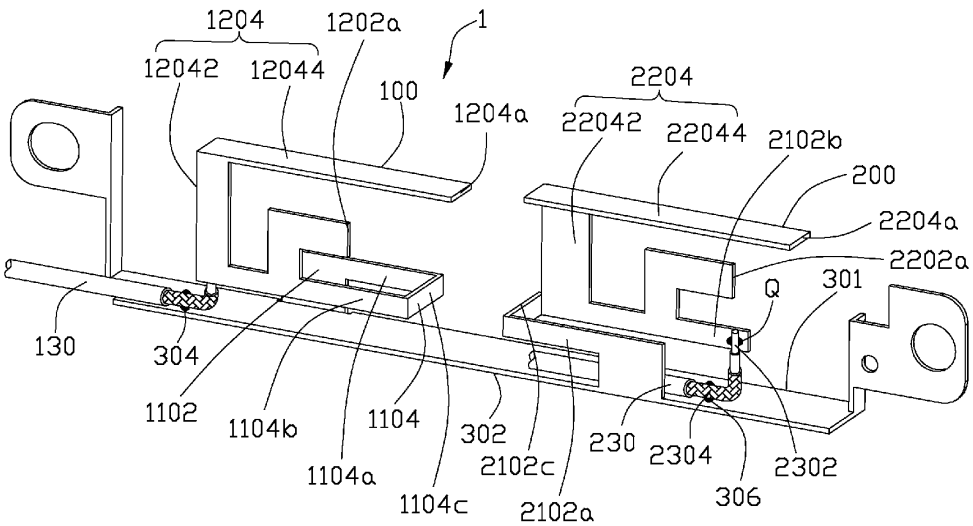

Acrobat 文件

US008305285B2

(12) **United States Patent**
Lee

(10) **Patent No.: US 8,305,285 B2**
(45) **Date of Patent: Nov. 6, 2012**

(54) **WIRELESS COMMUNICATION MODULE**

(75) Inventor: **Jinsik Lee**, Seoul (KR)

(73) Assignee: **LG Innotek Co., Ltd.**, Seoul (KR)

(*) Notice: Subject to any disclaimer, the term of this patent is extended or adjusted under 35 U.S.C. 154(b) by 336 days.

(21) Appl. No.: **12/806,689**

(22) Filed: **Aug. 19, 2010**

(65) **Prior Publication Data**

US 2011/0043426 A1 Feb. 24, 2011

(30) **Foreign Application Priority Data**

Aug. 19, 2009 (KR) 10-2009-0076657

(51) **Int. Cl.**
H01Q 1/48 (2006.01)

(52) **U.S. Cl.** **343/848**; 343/893; 343/702

(58) **Field of Classification Search** 343/702, 343/848, 893
See application file for complete search history.

(56) **References Cited**

U.S. PATENT DOCUMENTS

6,448,933 B1 * 9/2002 Hill et al. 343/702
7,358,927 B2 * 4/2008 Luebke et al. 343/907
2004/0257283 A1 * 12/2004 Asano et al. 343/702
2005/0062657 A1 * 3/2005 Lin 343/702
2006/0061512 A1 * 3/2006 Asano et al. 343/702
2007/0013602 A1 * 1/2007 Atkinson et al. 343/873

FOREIGN PATENT DOCUMENTS

KR 10-2005-0054478 A 6/2005
KR 10-2007-006219 A 6/2007

OTHER PUBLICATIONS

Office Action dated Feb. 17, 2011 in Korean Application No. 10-2009-0076657, filed Aug. 19, 2009.

* cited by examiner

Primary Examiner — Don Le
(74) *Attorney, Agent, or Firm* — Saliwanchik, Lloyd & Eisenschenk

(57) **ABSTRACT**

Disclosed herein is a wireless communication module, wherein a module substrate provided with components of a communication circuit part for the wireless communication module and having a ground pattern and a power feeding pattern is provided thereon with a shield can type antenna, the shield can type antenna comprises a ground area, a plurality of curved parts formed by downwardly curving both up/down and left/right side surfaces of the ground area, and an antenna part provided at the outer side of the curved part formed at both left/right side surfaces of the ground area.

10 Claims, 3 Drawing Sheets

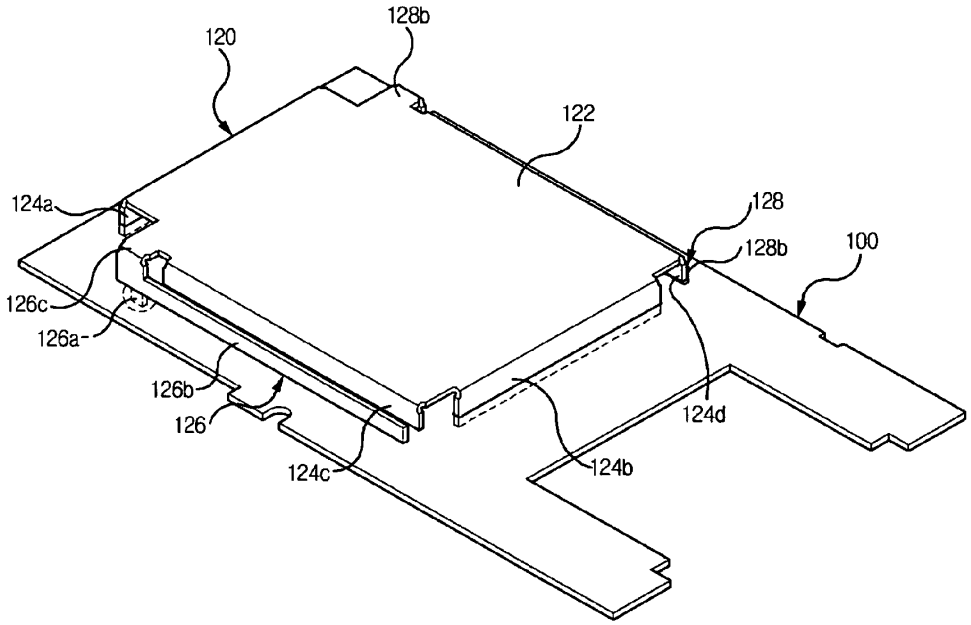

Acrobat 文件

US008305286B2

(12) **United States Patent**
Frank

(10) **Patent No.: US 8,305,286 B2**
(45) **Date of Patent: Nov. 6, 2012**

(54) **MOUNTING AN ANTENNA SYSTEM TO A SOLID SURFACE**

(75) Inventor: **Timothy A. Frank**, Parma, OH (US)

(73) Assignee: **Cisco Technology, Inc.**, San Jose, CA (US)

(*) Notice: Subject to any disclaimer, the term of this patent is extended or adjusted under 35 U.S.C. 154(b) by 672 days.

(21) Appl. No.: **12/474,524**

(22) Filed: **May 29, 2009**

(65) **Prior Publication Data**

US 2010/0302127 A1 Dec. 2, 2010

(51) **Int. Cl.**
H01Q 1/12 (2006.01)

(52) **U.S. Cl.** **343/878**

(58) **Field of Classification Search** 343/878, 343/872, 873, 720, 906
See application file for complete search history.

(56) **References Cited**

U.S. PATENT DOCUMENTS

4,090,030	A	5/1978	Lagasse	
4,649,675	A	3/1987	Moldovan et al.	
5,229,784	A	7/1993	Jones	
5,456,433	A	10/1995	Burns et al.	
5,619,217	A *	4/1997	Mailandt et al.	343/872
5,738,324	A *	4/1998	Van Hout et al.	248/317
5,887,831	A *	3/1999	Post	248/49
6,295,036	B1 *	9/2001	Mata et al.	343/878
6,320,545	B1	11/2001	Nagumo et al.	
6,806,832	B2	10/2004	Sato et al.	
2004/0066353	A1 *	4/2004	Ehlen et al.	343/891
2007/0278367	A1 *	12/2007	Batten	248/200
2009/0230827	A1 *	9/2009	Macall	312/223.1
2011/0068711	A1 *	3/2011	Spiro et al.	315/307

* cited by examiner

Primary Examiner — Huedung Mancuso
(74) *Attorney, Agent, or Firm* — Brinks Hofer Gilson & Lione

(57) **ABSTRACT**

A solid surface bracket is provided. The solid surface bracket is configured to couple an antenna system with a solid surface ceiling. The solid surface bracket may include a top flange, bottom flange, and a side flange. The top flange may include an opening that is sized and shaped to receive a solid surface screw. The solid surface screw may be configured to engage with the solid surface ceiling. The bottom flange may be configured to receive a clip of the antenna system. The bottom flange may extend substantially parallel to the top flange. The side flange may be coupled with the top flange and bottom flange. The side flange may extend between and substantially perpendicular to the top flange and bottom flange. The side flange may have a height greater than a minimum bend radius of a cable extending from the antenna system.

20 Claims, 4 Drawing Sheets

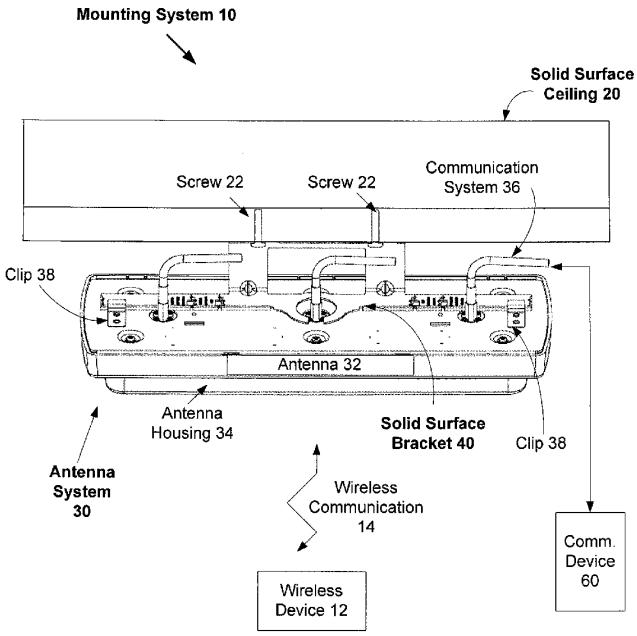

Acrobat 文件

US008305288B2

(12) **United States Patent**
Chen

(10) **Patent No.: US 8,305,288 B2**
(45) **Date of Patent: Nov. 6, 2012**

(54) **ANTENNA MODULE**

(75) Inventor: **Liang-Wei Chen**, Hsinchu (TW)

(73) Assignee: **Arcadyan Technology Corporation**, Hsinchu (TW)

(*) Notice: Subject to any disclaimer, the term of this patent is extended or adjusted under 35 U.S.C. 154(b) by 583 days.

(21) Appl. No.: **12/543,716**

(22) Filed: **Aug. 19, 2009**

(65) **Prior Publication Data**

US 2010/0060533 A1 Mar. 11, 2010

(30) **Foreign Application Priority Data**

Sep. 10, 2008 (TW) ..... 97134680 A

(51) **Int. Cl.**
H01Q 3/02 (2006.01)

(52) **U.S. Cl.** **343/882**; 343/702; 343/906; 439/11; 439/131

(58) **Field of Classification Search** 343/702, 343/882, 880, 906; 439/11, 131
See application file for complete search history.

(56) **References Cited**

U.S. PATENT DOCUMENTS

6,394,813	B1 *	5/2002	Stout et al.	439/11
6,816,121	B1 *	11/2004	Cheng et al.	343/702
7,470,148	B1	12/2008	Su et al.	
7,530,823	B1 *	5/2009	Thornton et al.	439/136
7,586,460	B2 *	9/2009	Hunt et al.	343/882
7,632,113	B2 *	12/2009	Finn	439/131
2007/0144875	A1	6/2007	Nagata	
2011/0181489	A1 *	7/2011	Kim et al.	343/906

FOREIGN PATENT DOCUMENTS

EP	0224006	A1	6/1987
EP	1688977	A2	8/2006
JP	6162871	A	6/1994
TW	M324886		1/2008
WO	WO-2008/026474	A1	3/2008

* cited by examiner

Primary Examiner — Tho G Phan
(74) *Attorney, Agent, or Firm* — Rabin & Berdo, P.C.

(57) **ABSTRACT**

An antenna module including a casing, a USB connecting end, an antenna, a key and a moving component is provided. The casing has a terminal end opposite to the USB connecting end and a hole located at the terminal end. The antenna is disposed in the casing near the terminal end. The key disposed in the casing has an enabling portion for enabling the key when being touched. The moving component disposed in the casing includes a contacting member and an actuating member. The contacting member has first and second ends and a pivotal portion. The pivotal portion is pivotally connected to the casing between the first and second ends. The actuating member exposed from the hole is for moving toward the USB connecting end. The first end is driven by the actuating member, so that the second end is rotated around the pivotal portion to touch the enabling portion.

6 Claims, 7 Drawing Sheets

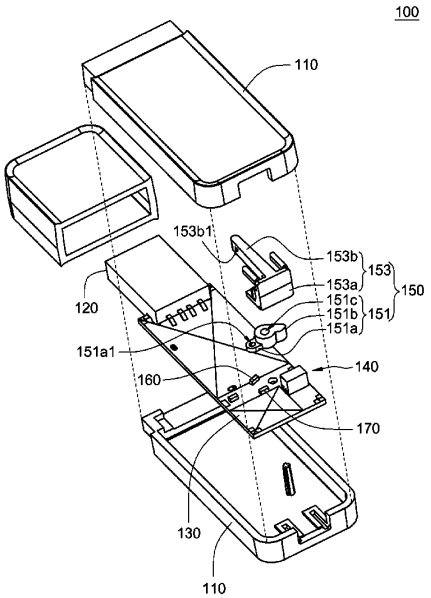

Acrobat 文件

US008305289B2

(12) **United States Patent**
Lo

(10) **Patent No.: US 8,305,289 B2**
(45) **Date of Patent: Nov. 6, 2012**

(54) **ANTENNA DEVICE WHOSE VERTICAL AND HORIZONTAL POSITIONS CAN BE ADJUSTED**

(75) Inventor: **Shan-Gow Lo**, Tainan (TW)

(73) Assignee: **Jebsee Electronics Co., Ltd.**, Tainan (TW)

(*) Notice: Subject to any disclaimer, the term of this patent is extended or adjusted under 35 U.S.C. 154(b) by 350 days.

(21) Appl. No.: **12/846,885**

(22) Filed: **Jul. 30, 2010**

(65) **Prior Publication Data**

US 2012/0026065 A1 Feb. 2, 2012

(51) **Int. Cl.**
H01Q 1/10 (2006.01)

(52) **U.S. Cl.** **343/890**; 343/892

(58) **Field of Classification Search** 343/890–892
See application file for complete search history.

(56) **References Cited**

U.S. PATENT DOCUMENTS

6,037,913	A *	3/2000	Johnson	343/882
6,195,066	B1 *	2/2001	Pegues et al.	343/883
6,262,691	B1 *	7/2001	Austin et al.	343/890
6,407,713	B1 *	6/2002	Mallenius	343/765

* cited by examiner

Primary Examiner — James H Cho
(74) *Attorney, Agent, or Firm* — Alan Kamrath; Kamrath IP Lawfirm, PA

(57) **ABSTRACT**

An antenna device includes a support pole, a fixing seat mounted on the support pole, at least one clamping member mounted on the support pole and combined with the fixing seat by at least one locking bolt, and an antenna box mounted on the fixing seat. The fixing seat is provided with a square mounting sleeve which has a mounting chamber and two opposite fixing holes. The antenna box has a square insertion block inserted into the mounting chamber. The insertion block has a plurality of adjusting holes. Thus, the orientation of the antenna box is adjustable so that the antenna box can be disposed at a horizontal position or a vertical position so as to receive a wireless signal exactly and clearly.

2 Claims, 5 Drawing Sheets

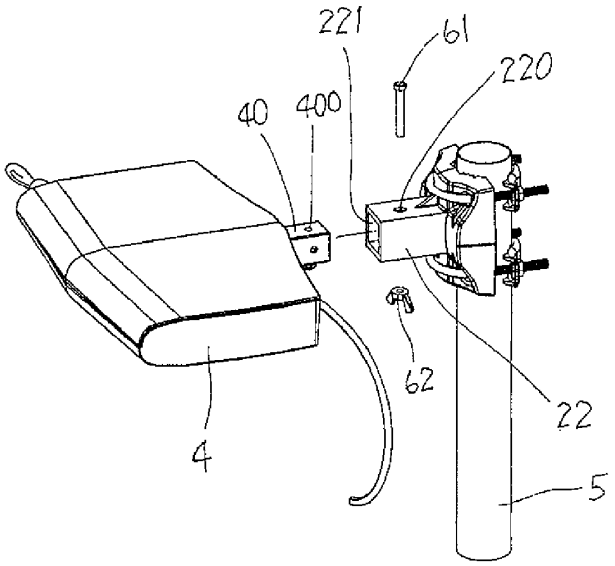

Acrobat 文件

US008306587B2

(12) **United States Patent**
Nishikido et al.

(10) **Patent No.: US 8,306,587 B2**
(45) **Date of Patent: Nov. 6, 2012**

(54) **ANTENNA ELEMENT AND PORTABLE RADIO**

(75) Inventors: **Tomoaki Nishikido**, Sendai (JP); **Hironori Kikuchi**, Sendai (JP); **Yoshio Koyanagi**, Yokohama (JP); **Kenichi Sato**, Sendai (JP); **Hiroaki Ohmori**, Sendai (JP)

(73) Assignee: **Panasonic Corporation**, Osaka (JP)

(*) Notice: Subject to any disclaimer, the term of this patent is extended or adjusted under 35 U.S.C. 154(b) by 193 days.

(21) Appl. No.: **12/672,401**

(22) PCT Filed: **Aug. 10, 2007**

(86) PCT No.: **PCT/JP2007/065744**

§ 371 (c)(1),
(2), (4) Date: **Feb. 5, 2010**

(87) PCT Pub. No.: **WO2009/022385**

PCT Pub. Date: **Feb. 19, 2009**

(65) **Prior Publication Data**

US 2011/0117976 A1 May 19, 2011

(51) **Int. Cl.**
H04M 1/00 (2006.01)
H01Q 1/24 (2006.01)
H01Q 1/12 (2006.01)

(52) **U.S. Cl.** **455/575.7**; 455/575.3; 343/718; 343/702

(58) **Field of Classification Search** 455/575.7, 455/575.3; 343/718, 702
See application file for complete search history.

(56) **References Cited**

U.S. PATENT DOCUMENTS

2002/0075192 A1 6/2002 Iwai
2003/0179143 A1* 9/2003 Iwai et al. 343/702
2004/0125032 A1 7/2004 Ikuta
2006/0071856 A1* 4/2006 Shinkai et al. ..... 343/7 MS
(Continued)

FOREIGN PATENT DOCUMENTS

JP 08-084013 A 3/1996
(Continued)

OTHER PUBLICATIONS

International Search Report mailed Sep. 25, 2007, in corresponding International Application No. PCT/JP2007/065744.

Primary Examiner — Ariel Balaoing
(74) *Attorney, Agent, or Firm* — Seed IP Law Group PLLC

(57) **ABSTRACT**

There are provided an antenna element and a portable radio that enable miniaturization, acquisition of a high gain, and broadening of a band and that copies compatible with multiple bands. A rectangular-parallelepiped-shaped antenna element is formed by folding two or more faces of a board-shaped monopole element having an rectangular shape so that the antenna element has a substantially rectangular first conductor plate **51** disposed in proximity to a hinge **4** while arranged at a predetermined space S from a lower circuit board (ground plate) **21**, a substantially rectangular second conductor plate **52** that shares a widthwise one side of the first conductor plate **51** and that is arranged while bent to an angle of about 90° with respect to the first conductor plate, and a substantially rectangular third conductor plate **53** that shares another widthwise side of the second conductor plate **52** opposing the side shared by the first conductor plate **51** and the second conductor plate **52** and that is arranged at an angle of about 90° so as to oppose the first conductor plate **51**.

4 Claims, 6 Drawing Sheets

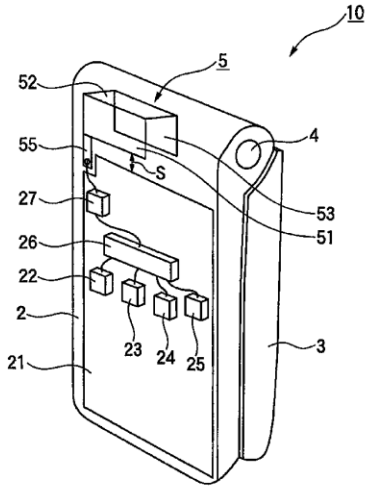

Acrobat 文件

US008310400B2

(12) **United States Patent**
Wang

(10) **Patent No.: US 8,310,400 B2**
(45) **Date of Patent: Nov. 13, 2012**

(54) **MOBILE APPARATUS**

(75) Inventor: **Ching-Sung Wang**, Taoyuan County (TW)

(73) Assignee: **HTC Corporation**, Taoyuan County (TW)

(*) Notice: Subject to any disclaimer, the term of this patent is extended or adjusted under 35 U.S.C. 154(b) by 430 days.

(21) Appl. No.: **12/619,657**

(22) Filed: **Nov. 16, 2009**

(65) **Prior Publication Data**

US 2010/0245180 A1 Sep. 30, 2010

(30) **Foreign Application Priority Data**

Mar. 26, 2009 (TW) ..... 98109994 A

(51) **Int. Cl.**
H01Q 1/24 (2006.01)

(52) **U.S. Cl.** **343/702**; 343/829; 343/846

(58) **Field of Classification Search** ..... None
See application file for complete search history.

(56) **References Cited**

U.S. PATENT DOCUMENTS

4,827,266 A 5/1989 Sato et al.
7,439,916 B2 * 10/2008 Wang et al. ..... 343/700 MS
2002/0075192 A1 * 6/2002 Iwai et al. 343/702
2005/0140554 A1 * 6/2005 Wang et al. 343/702
2007/0120748 A1 * 5/2007 Jenwatanavet et al. 343/702
2010/0259456 A1 * 10/2010 Desclos et al. 343/730

FOREIGN PATENT DOCUMENTS

EP 1209759 5/2002
EP 2099093 9/2009
WO 2007095371 8/2007

OTHER PUBLICATIONS

"Search Report of European Counterpart Application" issued on Apr. 7, 2010, p. 1-p. 4.
"Office Action of European Counterpart Application" issued on Apr. 16, 2010, p. 1-p. 4.

* cited by examiner

Primary Examiner — Trinh Dinh
(74) *Attorney, Agent, or Firm* — Jianq Chyun IP Office

(57) **ABSTRACT**

A mobile apparatus is provided. The mobile apparatus includes an antenna and a ground plane. The antenna is used to receive or transmit a radio frequency signal and includes a grounding part having a first ground terminal and a second ground terminal. Wherein, a distance between the first ground terminal and the second ground terminal is associated with a wavelength of the radio frequency signal. The ground plane is electrically connected to the grounding part of the antenna through the first ground terminal and the second ground terminal. The present invention effectively reduces a specific absorption ratio and a required height for setting the antenna such that a bandwidth of the antenna is increased.

13 Claims, 8 Drawing Sheets

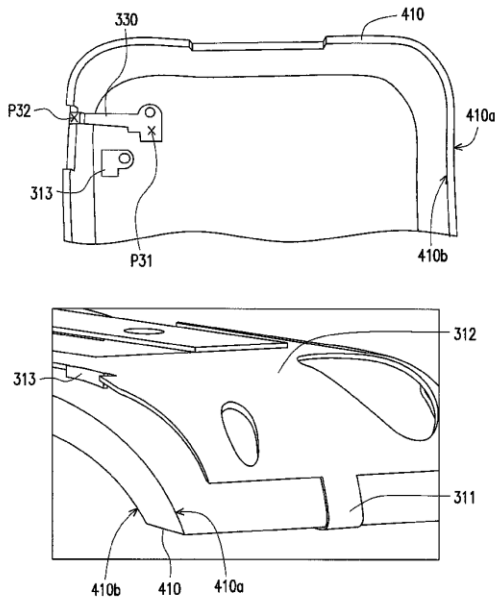

Acrobat 文件

US008310402B2

(12) **United States Patent**
Yang

(10) **Patent No.: US 8,310,402 B2**
(45) **Date of Patent: Nov. 13, 2012**

(54) **COMPACT MULTI-ELEMENT ANTENNA WITH PHASE SHIFT**

(75) Inventor: **Xiao Ping Yang**, San Diego, CA (US)

(73) Assignee: **Airgain, Inc.**, Carlsbad, CA (US)

(*) Notice: Subject to any disclaimer, the term of this patent is extended or adjusted under 35 U.S.C. 154(b) by 0 days.

(21) Appl. No.: **13/329,895**

(22) Filed: **Dec. 19, 2011**

(65) **Prior Publication Data**

US 2012/0086604 A1 Apr. 12, 2012

Related U.S. Application Data

(63) Continuation of application No. 11/866,354, filed on Oct. 2, 2007, now Pat. No. 8,081,123.

(60) Provisional application No. 60/827,846, filed on Oct. 2, 2006.

(51) **Int. Cl.**
H01Q 1/24 (2006.01)

(52) **U.S. Cl.** ..... **343/702**; 343/700 MS

(58) **Field of Classification Search** ..... 343/700 MS, 343/702, 876, 893
See application file for complete search history.

(56) **References Cited**

U.S. PATENT DOCUMENTS

5,598,174	A *	1/1997	Erkocevic et al.	343/795
6,005,530	A *	12/1999	Jovanovich et al.	343/827
6,222,494	B1 *	4/2001	Erkocevic	343/790
6,456,257	B1 *	9/2002	Zamat	343/876
6,512,487	B1 *	1/2003	Taylor et al.	343/795
2003/0132890	A1 *	7/2003	Rawnick et al.	343/824
2003/0189518	A1 *	10/2003	Johnson et al.	343/702
2004/0125036	A1 *	7/2004	Chiang et al.	343/757
2005/0200538	A1 *	9/2005	Tran	343/702

* cited by examiner

Primary Examiner — Hoanganh Le
(74) *Attorney, Agent, or Firm* — Clause Eight IPS; Michael Catania

(57) **ABSTRACT**

A phased array antenna system includes a first radiation element that is made of a material and has a length selected to resonate at a desired frequency. A phase-shift element is coupled to one end of the first radiation element. A second radiation element is coupled to the end of the phase-shift element opposite the first radiation element, so that a radio signal passes through the first radiation element through the phase-shift element and through the second radiation element, the second radiation element is made of a material and has a length selected to resonate such that the first and second radiation elements cooperate to form a desired beam pattern from the antenna system.

14 Claims, 10 Drawing Sheets

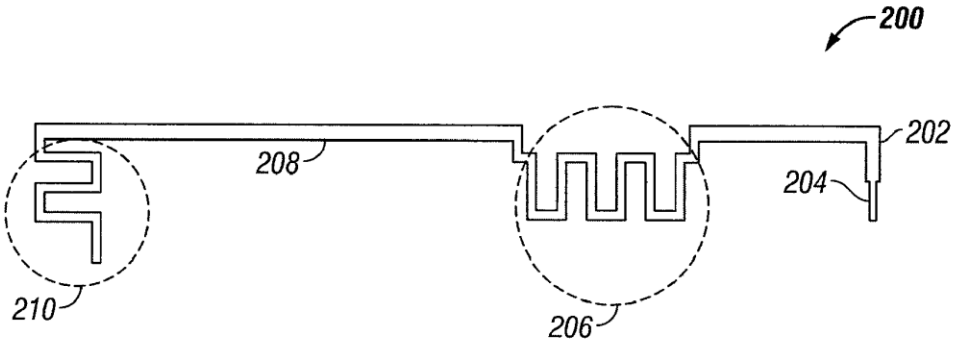

Acrobat 文件

US008310406B2

(12) **United States Patent**
Yanagi et al.

(10) **Patent No.: US 8,310,406 B2**
(45) **Date of Patent: Nov. 13, 2012**

(54) **ANTENNA DEVICE**

(75) Inventors: **Masahiro Yanagi**, Shinagawa (JP); **Shigemi Kurashima**, Shinagawa (JP); **Takashi Yuba**, Shinagawa (JP); **Satoshi Sakurai**, Shinagawa (JP); **Takashi Arita**, Shinagawa (JP)

(73) Assignee: **Fujitsu Component Limited**, Tokyo (JP)

(*) Notice: Subject to any disclaimer, the term of this patent is extended or adjusted under 35 U.S.C. 154(b) by 0 days.

(21) Appl. No.: **12/216,376**

(22) Filed: **Jul. 2, 2008**

(65) **Prior Publication Data**

US 2009/0140948 A1 Jun. 4, 2009

(30) **Foreign Application Priority Data**

Nov. 30, 2007 (JP) 2007-311451

(51) **Int. Cl.**
H01Q 1/48 (2006.01)

(52) **U.S. Cl.** **343/846**; 343/848

(58) **Field of Classification Search** ..... 343/878, 343/700 MS, 702, 789, 846, 848
See application file for complete search history.

(56) **References Cited**

U.S. PATENT DOCUMENTS

6,985,114	B2	1/2006	Egashira	
7,196,674	B2 *	3/2007	Timofeev et al.	343/810
7,436,360	B2 *	10/2008	Chen et al.	343/700 MS
7,782,601	B2 *	8/2010	Cho	361/679.21
2006/0097925	A1 *	5/2006	Lee	343/700 MS
2008/0122720	A1 *	5/2008	Liao	343/846
2008/0231520	A1 *	9/2008	Zueck et al.	343/702
2008/0316115	A1 *	12/2008	Hill et al.	343/702
2009/0213012	A1 *	8/2009	Jiang et al.	343/700 MS
2010/0081491	A1 *	4/2010	Lee	455/575.7

FOREIGN PATENT DOCUMENTS

JP	2000-196327	7/2000
JP	2002-330019	11/2002
JP	2005-5780	1/2005
JP	2007-142974	6/2007

OTHER PUBLICATIONS

T. Taniguchi et al., "An Omnidirectional and Low-VSWR Antenna for the FCC-Approved UWB Frequency Band" IEICE General Conference, Mar. 22, 2003.

Japanese Office Action dated Dec. 16, 2011 issued in corresponding Japanese Patent Application No. 2007-311451.

* cited by examiner

Primary Examiner — Jacob Y Choi
Assistant Examiner — Kyana R McCain
(74) *Attorney, Agent, or Firm* — Staas & Halsey LLP

(57) **ABSTRACT**

A disclosed antenna device includes a ground section; and an element section projecting from the ground section. The length of the ground section in a direction orthogonal to a side of the ground section from which side the element section projects is less than approximately ¼ a corresponding wavelength. The ground section is configured to be disposed over and attached to a conductive section.

19 Claims, 8 Drawing Sheets

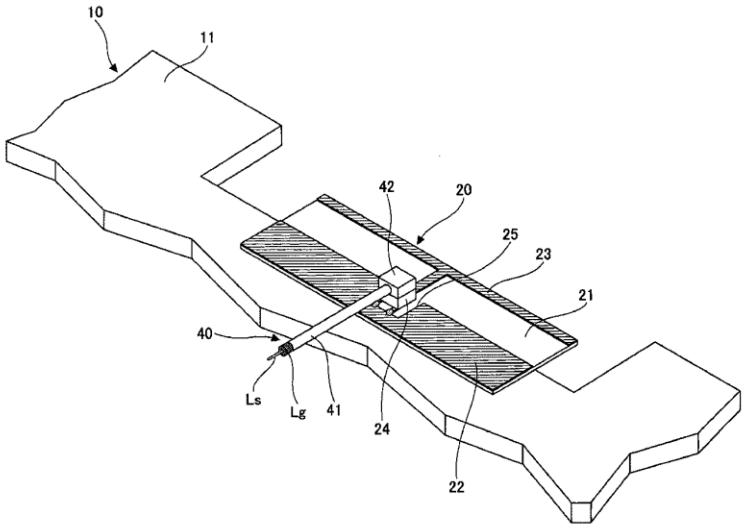

Acrobat 文件

US008314739B2

(12) **United States Patent**
Kuramoto

(10) **Patent No.: US 8,314,739 B2**
(45) **Date of Patent: Nov. 20, 2012**

(54) **WIDEBAND ANTENNA**

(75) Inventor: **Akio Kuramoto**, Minato-ku (JP)

(73) Assignee: **NEC Corporation**, Tokyo (JP)

(*) Notice: Subject to any disclaimer, the term of this patent is extended or adjusted under 35 U.S.C. 154(b) by 369 days.

(21) Appl. No.: **12/597,670**

(22) PCT Filed: **Apr. 25, 2008**

(86) PCT No.: **PCT/JP2008/058080**

§ 371 (c)(1),
(2), (4) Date: **Oct. 26, 2009**

(87) PCT Pub. No.: **WO2008/136414**

PCT Pub. Date: **Nov. 13, 2008**

(65) **Prior Publication Data**

US 2010/0141541 A1 Jun. 10, 2010

(30) **Foreign Application Priority Data**

Apr. 27, 2007 (JP) 2007-118619

(51) **Int. Cl.**
H01Q 1/12 (2006.01)

(52) **U.S. Cl.** ..... **343/718**; 343/700 MS

(58) **Field of Classification Search** ..... 343/718, 343/700 MS, 795, 793
See application file for complete search history.

(56) **References Cited**

U.S. PATENT DOCUMENTS

6,356,238	B1	3/2002	Gainor et al.	
6,600,454	B1	7/2003	Moilanen	
6,621,457	B1	9/2003	Adams et al.	
6,972,725	B1	12/2005	Adams	
7,002,526	B1	2/2006	Adams et al.	
2004/0201522	A1	10/2004	Forster	
2005/0035919	A1 *	2/2005	Yang et al.	343/795
2006/0119525	A1	6/2006	Cohen et al.	

FOREIGN PATENT DOCUMENTS

JP	6-152219	A	5/1994
JP	2002-280817	A	9/2002
JP	2002-538649	A	11/2002
JP	2003-309418	A	10/2003
JP	2004-295466	A	10/2004

(Continued)

OTHER PUBLICATIONS

Masato Tanaka et al., "Wearable Patch Antenna" IEICE Technical Report, Jul. 2002, pp. 1-8, vol. 102, No. 232.

(Continued)

Primary Examiner — Hoanganh Le
(74) *Attorney, Agent, or Firm* — Sughrue Mion, PLLC

(57) **ABSTRACT**

A wideband antenna includes a first radiating element and a second radiating element which are substantially in the same shape of a flat plate. A first side of the first radiating element is parallel to a second side of the second radiating element. Moreover, the first and second radiating elements are so arranged as to be shifted from each other with part of the first side facing part of the second side. If the first and second radiating elements thus arranged are moved in parallel so that the first and second sides face each other and are parallel to each other, the first and second sides substantially have line symmetry.

Electricity is supplied to the first and the second radiating elements at a predetermined position where part of the first side faces part of the second side.

18 Claims, 27 Drawing Sheets

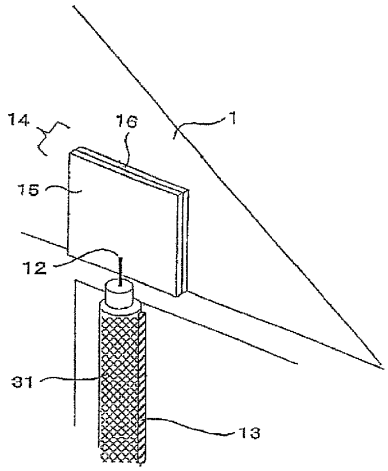

Acrobat 文件

US008314741B2

(12) **United States Patent**
Nagai et al.

(10) **Patent No.: US 8,314,741 B2**
(45) **Date of Patent: Nov. 20, 2012**

(54) **ONE-WAVELENGTH LOOP ANTENNA**

(75) Inventors: **Takuya Nagai**, Aichi (JP); **Tomohiro Sawazaki**, Aichi (JP)

(73) Assignee: **Brother Kogyo Kabushiki Kaisha**, Nagoya-Shi, Aichi-Ken (JP)

(*) Notice: Subject to any disclaimer, the term of this patent is extended or adjusted under 35 U.S.C. 154(b) by 474 days.

(21) Appl. No.: **12/721,976**

(22) Filed: **Mar. 11, 2010**

(65) **Prior Publication Data**

US 2010/0245193 A1 Sep. 30, 2010

(30) **Foreign Application Priority Data**

Mar. 30, 2009 (JP) 2009-083079

(51) **Int. Cl.**
H01Q 9/26 (2006.01)

(52) **U.S. Cl.** **343/743**; 343/726; 343/905

(58) **Field of Classification Search** 343/741–743, 343/702, 726, 821, 803–804, 806, 850, 860, 343/905
See application file for complete search history.

(56) **References Cited**

U.S. PATENT DOCUMENTS

3,550,137	A	12/1970	Kuecken	
5,485,165	A *	1/1996	Foard	343/741
7,969,372	B2 *	6/2011	Miyashita et al.	343/742
7,978,141	B2 *	7/2011	Chi et al.	343/741
2008/0136720	A1	6/2008	Parsche et al.	
2010/0245194	A1 *	9/2010	Sawazaki et al.	343/743

FOREIGN PATENT DOCUMENTS

EP	0 352 824	1/1990
JP	2001-36330	2/2001

* cited by examiner

Primary Examiner — Vibol Tan
(74) *Attorney, Agent, or Firm* — McCarter & English, LLP

(57) **ABSTRACT**

A one-wavelength loop antenna includes a looped antenna element having a length equivalent to one wavelength related to communication; and a feeding cable for feeding current to a feeding point on the antenna element, wherein an inner conductor is disposed inside an outer conductor in a section between the feeding point and an extraction position of the feeding cable distanced from the feeding point by ⅛ wavelength or more, at least one of the outer and inner conductors functioning as the feeding cable.

8 Claims, 7 Drawing Sheets

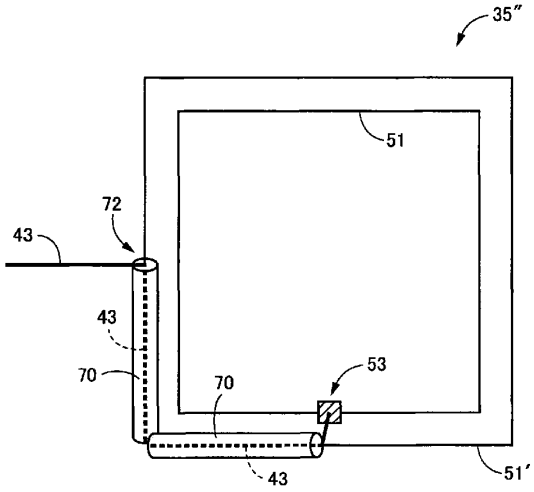

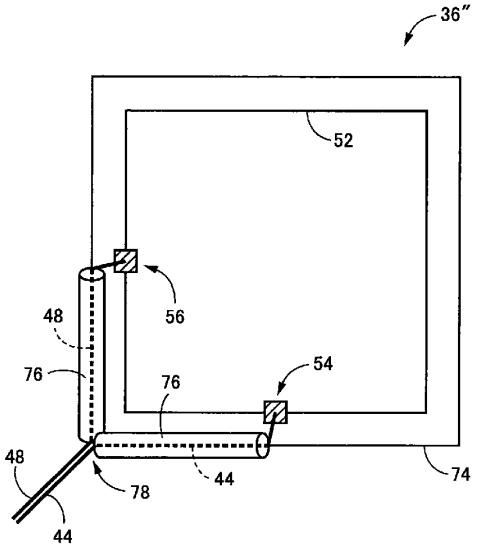

Acrobat 文件

US008314748B2

(12) **United States Patent**
Ksienski et al.

(10) **Patent No.: US 8,314,748 B2**
(45) **Date of Patent: Nov. 20, 2012**

(54) **HEPTAGONAL ANTENNA ARRAY**

(75) Inventors: **David A. Ksienski**, Los Angeles, CA (US); **Walter L. Bloss**, Rancho Palos Verdes, CA (US); **Eric K. Hall, II**, Seal Beach, CA (US); **James P. McKay**, Hermosa Beach, CA (US)

(73) Assignee: **The Aerospace Corporation**, El Segundo, CA (US)

(*) Notice: Subject to any disclaimer, the term of this patent is extended or adjusted under 35 U.S.C. 154(b) by 208 days.

(21) Appl. No.: **12/720,659**

(22) Filed: **Mar. 9, 2010**

(65) **Prior Publication Data**

US 2011/0063178 A1 Mar. 17, 2011

Related U.S. Application Data

(63) Continuation-in-part of application No. 11/821,931, filed on Jun. 26, 2007, now Pat. No. 7,710,346.

(51) **Int. Cl.**
H01Q 21/00 (2006.01)

(52) **U.S. Cl.** **343/844**; 343/705; 343/853; 244/172.6

(58) **Field of Classification Search** 343/705, 343/754, 757, 844, 853, 912, 915; 244/172.6
See application file for complete search history.

(56) **References Cited**

U.S. PATENT DOCUMENTS

3,754,267	A *	8/1973	Walters et al.	.....	343/705
4,855,751	A *	8/1989	Ingerson	.....	343/779
5,961,076	A *	10/1999	Eller et al.	.....	244/171.6
5,963,182	A *	10/1999	Bassily	.....	343/912
5,984,235	A *	11/1999	Snowhook	.....	244/171.3
6,504,514	B1 *	1/2003	Toland et al.	.....	343/781 P
7,874,520	B2 *	1/2011	McKinnon et al.	.....	244/171.8

* cited by examiner

Primary Examiner — Tho G Phan
(74) *Attorney, Agent, or Firm* — Paul D. Chancellor; Ocean Law

(57) **ABSTRACT**

An antenna system includes a heptagonal antenna array having one center antenna element and seven circumferentially surrounding antenna elements offering improved near and far sidelobe rejection, which is well suited for mechanically-gimbaled and time delayed electrical steering antenna applications.

2 Claims, 3 Drawing Sheets

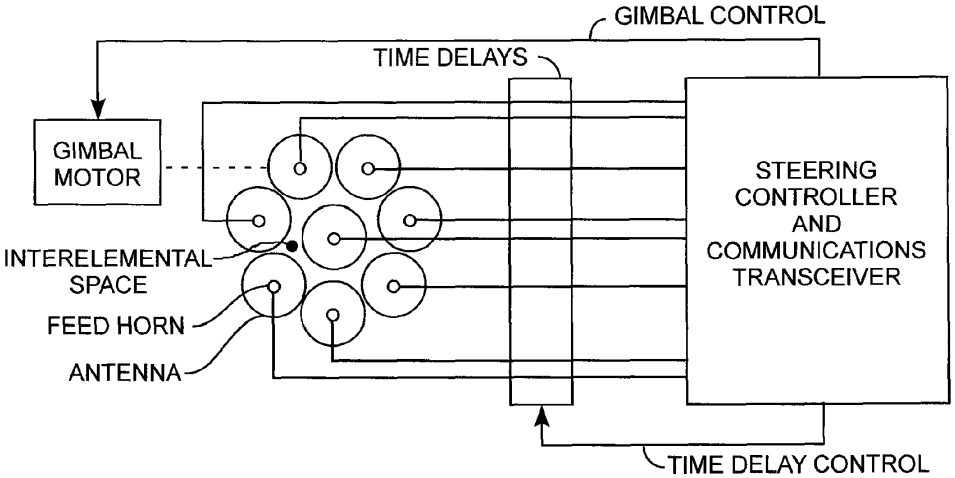

HEPTAGONAL ANTENNA ARRAY SYSTEM

Acrobat 文件

US008315557B1

(12) **United States Patent**
Rao et al.

(10) **Patent No.: US 8,315,557 B1**
(45) **Date of Patent: Nov. 20, 2012**

(54) **COMMON APERTURE ANTENNA FOR MULTIPLE CONTOURED BEAMS AND MULTIPLE SPOT BEAMS**

(75) Inventors: **Sudhakar Rao**, Churchville, PA (US); **Jim Wang**, Churchville, PA (US); **Chih-Chien Hsu**, Cherry Hill, NJ (US)

(73) Assignee: **Lockheed Martin Corporation**, Bethesda, MD (US)

(*) Notice: Subject to any disclaimer, the term of this patent is extended or adjusted under 35 U.S.C. 154(b) by 193 days.

(21) Appl. No.: **12/823,841**

(22) Filed: **Jun. 25, 2010**

Related U.S. Application Data

(60) Provisional application No. 61/291,589, filed on Dec. 31, 2009.

(51) **Int. Cl.**
H04B 7/185 (2006.01)

(52) **U.S. Cl.** **455/13.3**; 455/427; 455/431; 455/12.1; 343/765; 343/761; 343/772; 343/775

(58) **Field of Classification Search** 455/427, 455/431, 12.1, 13.3; 343/765, 761, 772, 343/775, 779, 776, 786
See application file for complete search history.

(56) **References Cited**

U.S. PATENT DOCUMENTS

5,258,767	A *	11/1993	Nomoto et al.	343/781 R
6,366,257	B1 *	4/2002	Ramanujam et al.	343/781 P
6,456,251	B1 *	9/2002	Rao	343/757
6,456,252	B1 *	9/2002	Goyette	343/779
6,940,452	B2	9/2005	Munoz et al.	
7,024,158	B2	4/2006	Wiswell	
7,382,743	B1	6/2008	Rao et al.	
2005/0052333	A1 *	3/2005	Rao et al.	343/840
2009/0309801	A1	12/2009	Rao et al.	

OTHER PUBLICATIONS

Written Opinion dated Feb. 17, 2011 for PCT/US2010/060988.
International Search Report dated Feb. 17, 2011 for PCT/US2010/060988.

* cited by examiner

Primary Examiner — Fayyaz Alam
(74) *Attorney, Agent, or Firm* — McDermott Will & Emery LLP

(57) **ABSTRACT**

An antenna assembly includes a reflector having a focal plane, a first feed element located along the focal plane that illuminates the reflector to create a first contour beam at a first frequency and a second feed element located further from the reflector than the first feed element that illuminates the reflector to create a first spot beam at a second frequency, the second frequency being different than the first frequency.

7 Claims, 11 Drawing Sheets

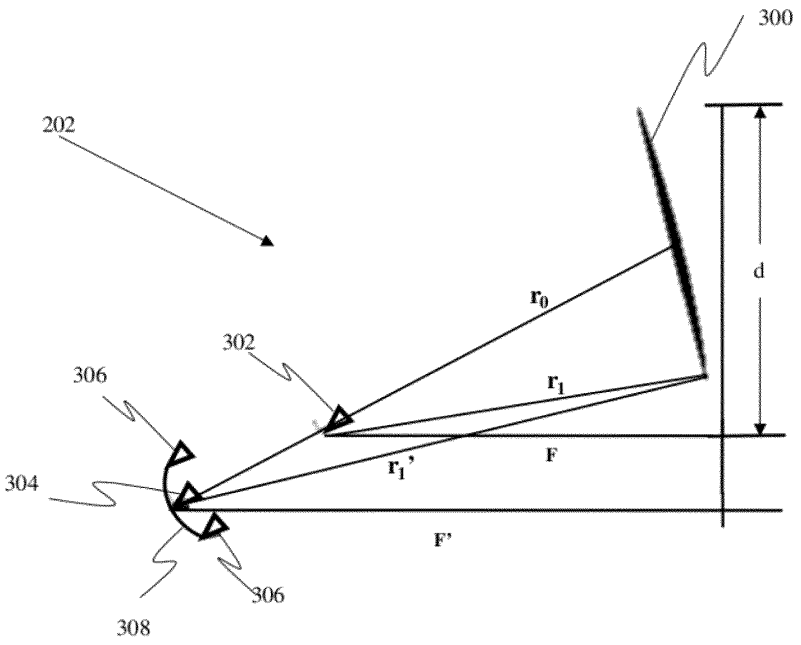

Acrobat 文件