US 20140145885A1

(19) United States

(12) Patent Application Publication

Huang et al.

(10) Pub. No.: US 2014/0145885 A1

(43) Pub. Date: May 29, 2014

(54) **PRINTED WIDE BAND MONOPOLE ANTENNA MODULE**

(71) Applicant: **Arcadyan Technology Corporation**, Hsinchu (TW)

(72) Inventors: **Chih-Yung Huang**, Taichung City (TW); **Kuo-Chang Lo**, Miaoli County (TW); **Jen-Hsiang Fang**, Hsinchu City (TW)

(21) Appl. No.: **13/916,124**

(22) Filed: **Jun. 12, 2013**

(30) **Foreign Application Priority Data**

Nov. 26, 2012 (TW) 101144190

Publication Classification

(51) **Int. Cl.**
H01Q 9/04 (2006.01)

(52) **U.S. Cl.**
CPC *H01Q 9/0407* (2013.01)
USPC ..... **343/700 MS**

(57) **ABSTRACT**

A printed wide band monopole antenna module is provided. The module comprises: a substrate having a first surface, a ground terminal part formed on the first surface, and an antenna body disposed on the first surface opposite to the ground terminal part. The antenna body comprises: a first extending part having a first length, a second extending part having a second length, and a third extending part having a first width. The width of the second extending part is the first width plus a second width. The second extending part forms a connection with the first and the third extending part. The ratio of the first length to the second length is less than a first value. The ratio of the first length to the sum of the first and the second width is less than a second value.

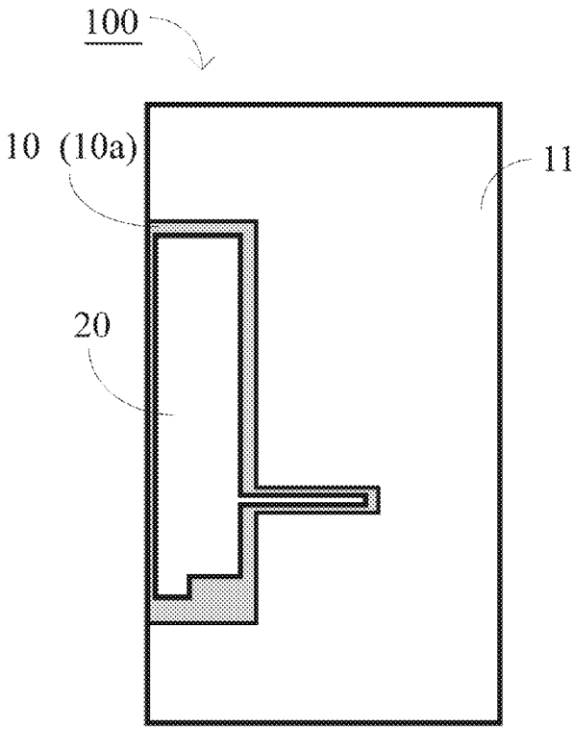

US 20140145889A1

(19) United States

(12) Patent Application Publication

Kim

(10) Pub. No.: US 2014/0145889 A1

(43) Pub. Date: May 29, 2014

(54) **ANTENNA WHICH CAN BE USED AS DIVERSITY ANTENNA**

(71) Applicant: **ACE TECHNOLOGIES CORPORATION**, Incheon -si (KR)

(72) Inventor: **Byoung-Nam Kim**, Gyeonggi-do (KR)

(73) Assignee: **ACE TECHNOLOGIES CORPORATION**, Incheon-si (KR)

(21) Appl. No.: **14/088,120**

(22) Filed: **Nov. 22, 2013**

(30) **Foreign Application Priority Data**

Nov. 23, 2012 (KR) 10-2012-133985

Publication Classification

(51) **Int. Cl.**
H01Q 1/50 (2006.01)

(52) **U.S. Cl.**
CPC ***H01Q 1/50*** (2013.01)
USPC **343/724**

(57) **ABSTRACT**

An antenna device capable of using an existing external antenna as a diversity antenna is disclosed. The disclosed antenna device includes: a radiator configured to be extensible to the outside of a terminal; a feeding switch configured to perform a switching operation for connecting one of a plurality of feeding units to the radiator; at least one conductive line of which a first end coming into contact with a part of the radiator when the radiator is inserted into the inside of the terminal; and at least one ground switch coupled to the at least one conductive line and configured to switch a connection between a second end of the conductive line and the ground. In accordance with the disclosed antenna device, it is possible to use an existing external antenna as a diversity antenna without installing an additional antenna.

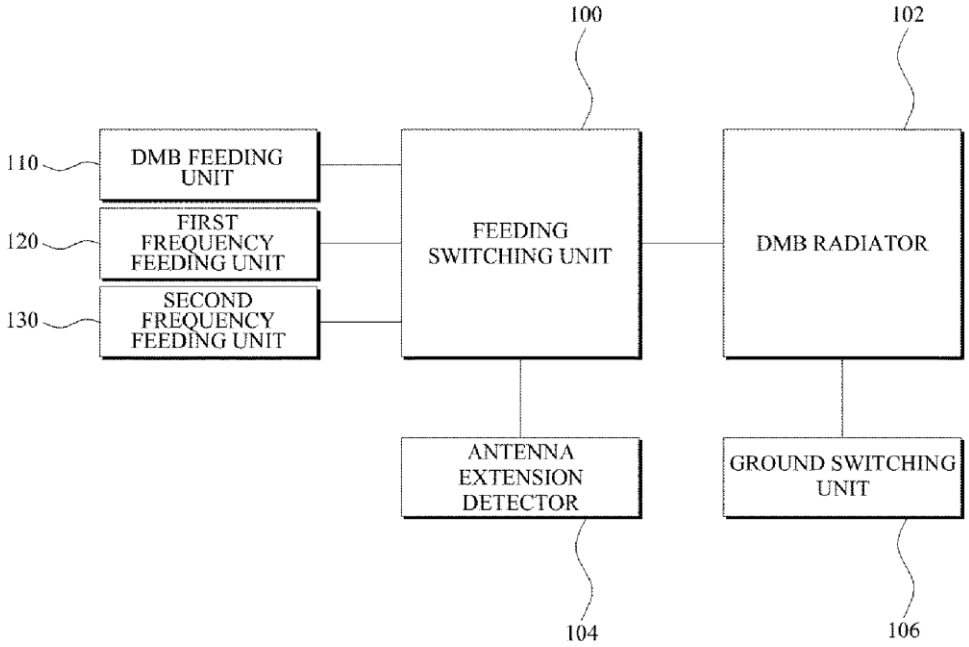

US 20140145892A1

(19) United States

(12) Patent Application Publication

TSENG et al.

(10) Pub. No.: US 2014/0145892 A1

(43) Pub. Date: May 29, 2014

(54) **PORTABLE COMMUNICATION DEVICE AND ADJUSTABLE ANTENNA THEREOF**

(71) Applicant: **HTC CORPORATION**, Taoyuan County (TW)

(72) Inventors: **Chun-Wei TSENG**, Taoyuan County (TW); **Yu-Meng YEN**, Taoyuan County (TW); **Ruey-Hsuan LEE**, Taoyuan County (TW); **Chien-Chih CHEN**, Taoyuan County (TW); **Yen-Liang KUO**, Taoyuan County (TW); **Wan-Ming CHEN**, Taoyuan County (TW)

(73) Assignee: **HTC CORPORATION**, Taoyuan County (TW)

(21) Appl. No.: **13/688,221**

(22) Filed: **Nov. 29, 2012**

Publication Classification

(51) **Int. Cl.**
H01Q 9/04 (2006.01)

(52) **U.S. Cl.**
CPC *H01Q 9/0407* (2013.01)
USPC **343/750**; 343/904

(57) **ABSTRACT**

A portable communication device and an adjustable antenna thereof are disclosed herein. The portable communication device includes a substrate, the adjustable antenna and a control circuit. The adjustable antenna includes an antenna body, an adjusting element, a feeding terminal and a ground terminal. The antenna body has multiple conductive portions and is disposed above the substrate. The adjusting element is coupled between the conductive portions. The feeding terminal and the ground terminal extend from the antenna body and are coupled to the substrate. The control circuit feeds a first control signal and a second control signal respectively through the feeding terminal and the ground terminal to the adjusting element, so as to adjust an electrical length of the adjustable antenna.

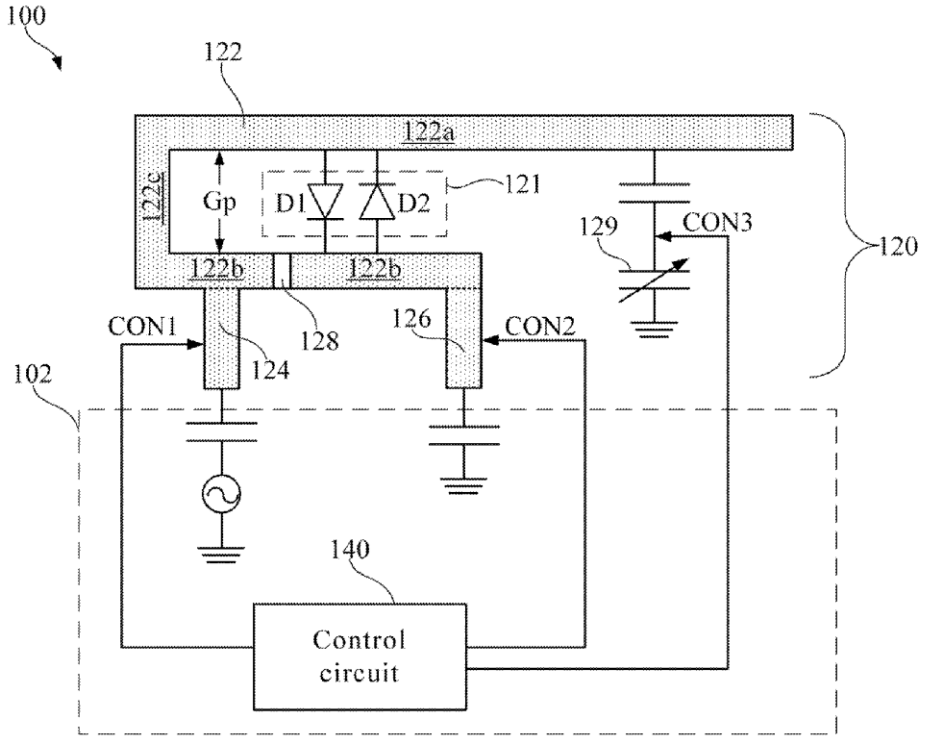

US 20140145895A1

(19) United States

(12) Patent Application Publication

CHEN et al.

(10) Pub. No.: US 2014/0145895 A1

(43) Pub. Date: May 29, 2014

(54) **DUAL WIDEBAND DIPOLE ANTENNA**

(71) Applicant: **SOUTHERN TAIWAN UNIVERSITY OF TECHNOLOGY**, Tainan City (TW)

(72) Inventors: **WEN-SHAN CHEN**, TAINAN CITY (TW); **HUNG-YING LIN**, TAINAN CITY (TW)

(73) Assignee: **SOUTHERN TAIWAN UNIVERSITY OF TECHNOLOGY**, TAINAN CITY (TW)

(21) Appl. No.: **13/685,970**

(22) Filed: **Nov. 27, 2012**

Publication Classification

(51) **Int. Cl.**
H01Q 9/16 (2006.01)

(52) **U.S. Cl.**
CPC ***H01Q 9/16*** (2013.01)
USPC **343/795**

(57) **ABSTRACT**

A dual wideband dipole antenna used for wireless communication and receiving electromagnetic signals is revealed. The antenna mainly includes a dielectric substrate, two radiating metal portions and a feed line. Each radiating metal portion consists of a metal plate, an L-shaped metal piece and a rectangular metal sheet. An initial end of the metal plate has a feeding point. The metal plate has a regulatory segment and a projecting segment. The L-shaped metal piece is between a terminal end of the metal plate and the regulatory segment. The L-shaped metal piece has a turning portion. The rectangular metal sheet is between the terminal end of the metal plate and a rear end of the regulatory segment of the other metal plate. The feed line connects the feeding points. Thus the antenna is excited to produce resonance frequencies at 0.85, 1.13, 1.68, 1.93 and 2.29 GHz and cover GSM850/900/1800/1900 bands.

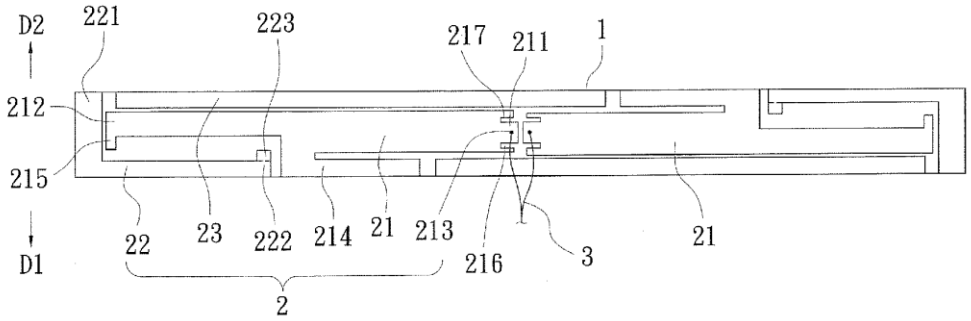

US 20140145896A1

(19) United States

(12) Patent Application Publication

(10) Pub. No.: US 2014/0145896 A1

(43) Pub. Date: May 29, 2014

Bi et al.

(54) **MULTI-MODE ANTENNA AND BASE STATION**

(71) Applicant: **China Telecom Corporation Limited**, Beijing (CN)

(72) Inventors: **Qi Bi**, Morris Plains, NJ (US); **Weiliang Xie**, Beijing (CN)

(73) Assignee: **China Telecom Corporation Limited**, Beijing (CN)

(21) Appl. No.: **14/168,215**

(22) Filed: **Jan. 30, 2014**

Related U.S. Application Data

(63) Continuation of application No. PCT/CN2012/079667, filed on Aug. 3, 2012.

(30) **Foreign Application Priority Data**

Aug. 4, 2011 (CN) 201110221717.5

Publication Classification

(51) **Int. Cl.**
H01Q 21/24 (2006.01)

(52) **U.S. Cl.**
CPC *H01Q 21/24* (2013.01)
USPC **343/844**

(57) **ABSTRACT**

This invention discloses a multi-mode antenna and a base station, the multi-mode antenna comprising a CDMA dual-polarized antenna for CDMA radio frequency signals and two MIMO dual-polarized antennas for LTE radio frequency signals with a plurality of linearly arranged radiation elements; the two MIMO dual-polarized antennas are respectfully vertically stacked right above and right below the centre radiation element of the CDMA dual-polarized antenna; and the radiation elements in the two MIMO dual-polarized antennas are nested in or inserted between the radiation elements of the CDMA dual-polarized antenna according to the distance between the radiation elements of the CDMA dual-polarized antenna and the distance between the radiation elements of each MIMO dual-polarized antenna. The present invention combines the technologies of nested antenna radiation elements and vertical isolation separation of MIMO antennas so as to integrate a CDMA dual-polarized antenna and two MIMO dual-polarized antennas into one physical antenna.

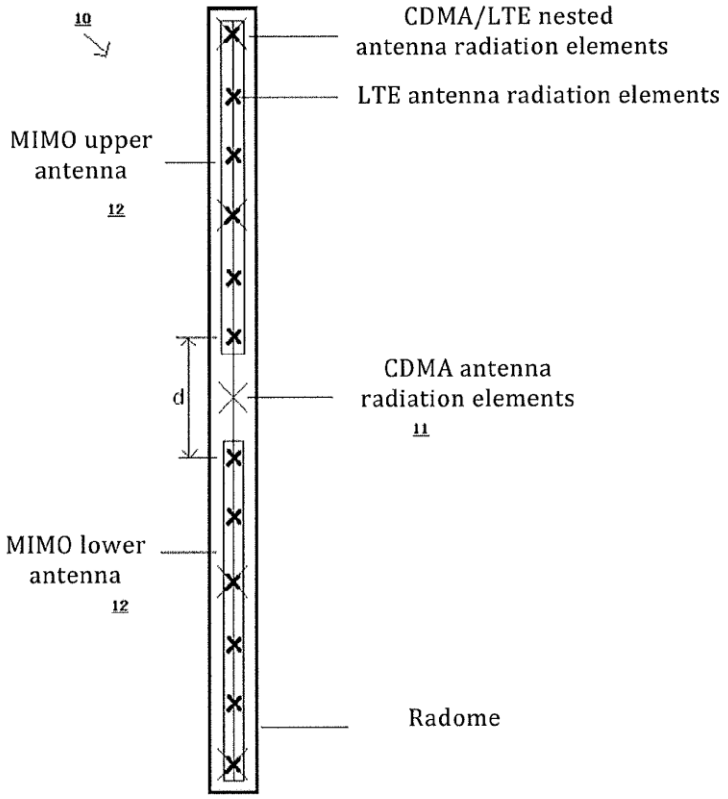

US 20140145897A1

(19) United States

(12) Patent Application Publication

SONNERAT et al.

(10) Pub. No.: US 2014/0145897 A1

(43) Pub. Date: May 29, 2014

(54) **ANTENNA CIRCUIT USING MULTIPLE INDEPENDENT ANTENNAS SIMULTANEOUSLY THROUGH A SINGLE FEED**

(71) Applicants: **STMICROELECTRONICS (CROLLES 2) SAS**, Crolles (FR); **STMICROELECTRONICS SA**, MONTROUGE (FR)

(72) Inventors: **Florence SONNERAT**, St ferreol (FR); **Romain PILARD**, Goncelin (FR); **Frédéric GIANESELLO**, Saint Pierre d' Albigny (FR); **Cédric DURAND**, ST MARTIN D HERES (FR)

(73) Assignees: **STMICROELECTRONICS (CROLLES 2) SAS**, Crolles (FR); **STMICROELECTRONICS SA**, MONTROUGE (FR)

(21) Appl. No.: **14/058,515**

(22) Filed: **Oct. 21, 2013**

(30) **Foreign Application Priority Data**

Nov. 23, 2012 (FR) 1261159

Publication Classification

(51) **Int. Cl.**

H01Q 21/30 (2006.01)

H01Q 21/00 (2006.01)

(52) **U.S. Cl.**

CPC ***H01Q 21/30*** (2013.01); ***H01Q 21/0087*** (2013.01)

USPC **343/853**; 29/601

(57) **ABSTRACT**

An antenna circuit includes a first antenna tuned to a first fundamental frequency and a second antenna tuned to a second fundamental frequency different from the first fundamental frequency. A first filter has a first terminal connected to the first antenna and attenuates the frequency components outside of a band defined by the first fundamental frequency or its harmonics. A second filter has a first terminal coupled to the second antenna and attenuates the frequency components outside of a band defined by the second fundamental frequency or its harmonics. A passive recombination element couples the second terminals of the two filters to a common terminal.

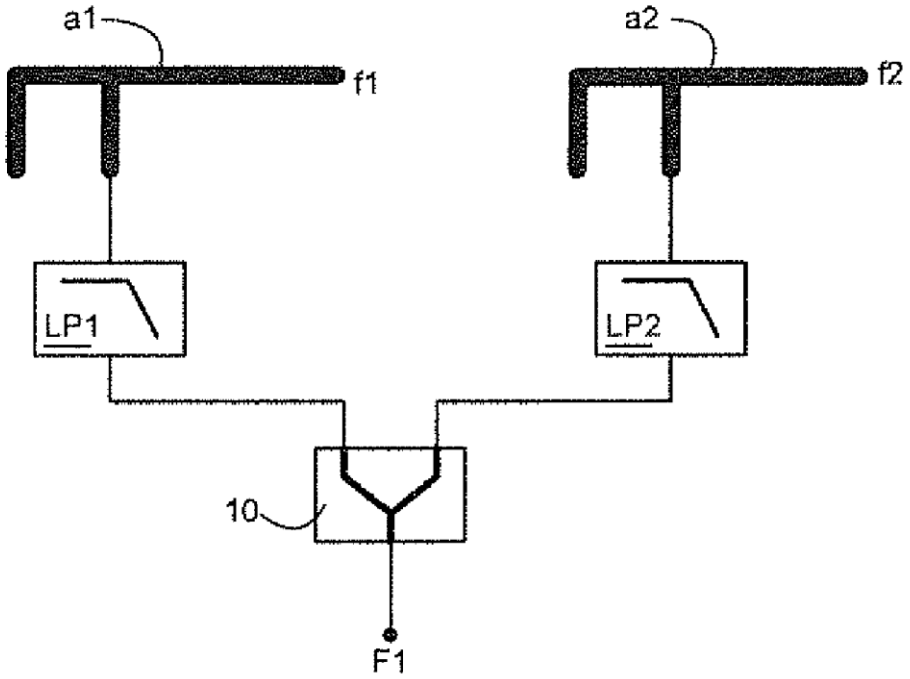

US 20140145900A1

(19) United States

(12) Patent Application Publication

Wong et al.

(10) Pub. No.: US 2014/0145900 A1

(43) Pub. Date: May 29, 2014

(54) **COMMUNICATION DEVICE AND RECONFIGURABLE ANTENNA ELEMENT THEREIN**

(71) Applicant: **ACER INCORPORATED**, New Taipei City (TW)

(72) Inventors: **Kin-Lu Wong**, Kaohsiung City (TW); **Yi-Ting Hsieh**, Kaohsiung City (TW)

(73) Assignee: **ACER INCORPORATED**, New Taipei City (TW)

(21) Appl. No.: **13/747,490**

(22) Filed: **Jan. 23, 2013**

(30) **Foreign Application Priority Data**

Nov. 28, 2012 (TW) 101144538

Publication Classification

(51) **Int. Cl.**

H01Q 7/00 (2006.01)

H01Q 1/50 (2006.01)

(52) **U.S. Cl.**

CPC ... ***H01Q 7/00*** (2013.01); ***H01Q 1/50*** (2013.01)

USPC **343/860**; 343/868

(57) **ABSTRACT**

A communication device including a ground element, an antenna element and a switching unit is provided. The antenna element is substantially a loop antenna and includes a first part, a second part and a third part. The second part includes (N−1) bends for forming N connection sections. The third part includes (P−1) bends for forming P ground sections. The N connection sections are connected in series between a first end of a first ground section and the first part. A second end of an ith ground section is electrically connected to a first end of an $(i+1)^{th}$ ground section, i is an integer and $1 \leq i \leq (P-1)$. A second end of a Pth ground section is electrically connected to the ground element, and a $(P-1)^{th}$ ground section includes at least one ground point. The switching unit is electrically connected between the at least one ground point and the ground element.

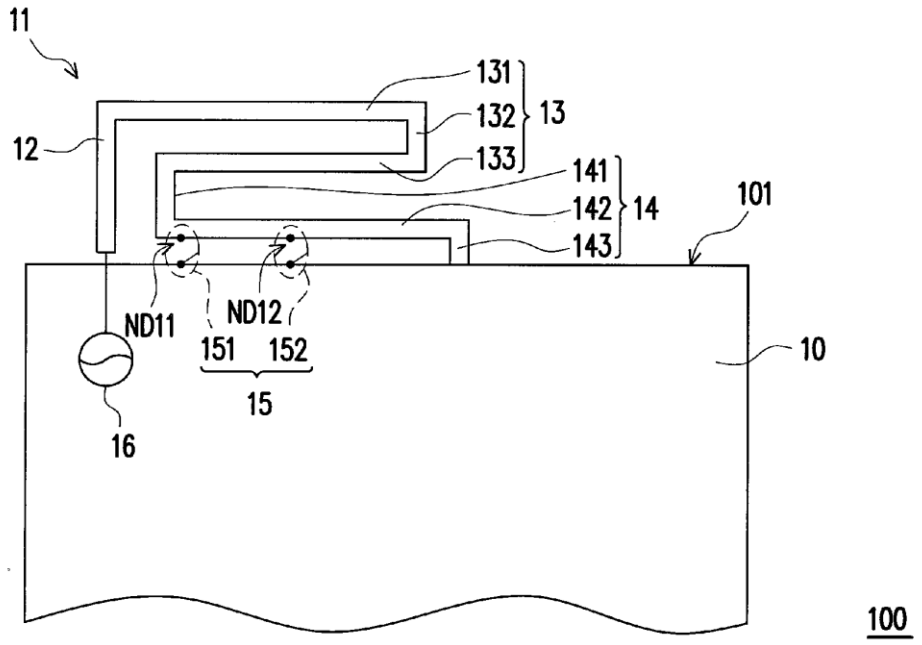

US 20140146865A1

(19) United States

(12) Patent Application Publication

Lagnado et al.

(10) Pub. No.: US 2014/0146865 A1

(43) Pub. Date: May 29, 2014

(54) **WIRED CONNECTOR AND ANTENNA**

(71) Applicant: **HEWLETT-PACKARD DEVELOPMENT COMPANY, L.P.**, Fort Collins, CO (US)

(72) Inventors: **Isaac Lagnado**, Houston, TX (US); **Timothy Neill**, Houston, TX (US)

(73) Assignee: **Hewlett-Packard Development Company, L.P.**, Fort Collins, CO (US)

(21) Appl. No.: **13/689,565**

(22) Filed: **Nov. 29, 2012**

Publication Classification

(51) **Int. Cl.**

H04W 24/02 (2006.01)

H01Q 1/22 (2006.01)

(52) **U.S. Cl.**

CPC ***H04W 24/02*** (2013.01); ***H01Q 1/2266*** (2013.01)

USPC **375/225**; 343/702; 375/224

(57) **ABSTRACT**

An antenna can be in a computing device. A connector can be in the computing device and adjacent to the antenna for a wired connection. In one implementation the antenna is connector to a controller to monitor the antenna for wireless signal degradation and compensate for the wireless signal degradation.

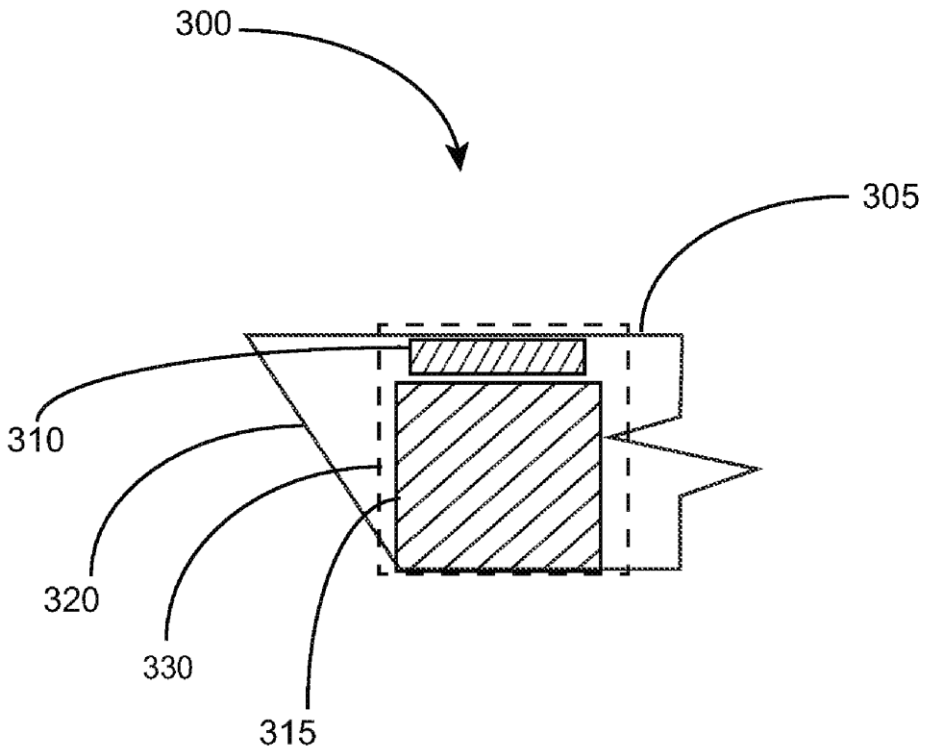

US 20140152515A9

(19) **United States**

(12) **Patent Application Publication**

Baba et al.

(10) **Pub. No.: US 2014/0152515 A9**

(48) **Pub. Date: Jun. 5, 2014**

CORRECTED PUBLICATION

(54) **ANTENNA DEVICE AND WIRELESS COMMUNICATION APPARATUS**

(76) Inventors: **Junnei Baba**, Fukuoka (JP); **Tetsuya Ashizuka**, Fukuoka (JP); **Ichiro Komaki**, Fukuoka (JP)

(21) Appl. No.: **13/981,906**

(22) PCT Filed: **Jan. 26, 2012**

(86) PCT No.: **PCT/JP2012/000499**

§ 371 (c)(1),
(2), (4) Date: **Jul. 25, 2013**

Prior Publication Data

(15) Correction of US 2013/0307738 A1 Nov. 21, 2013
See (30) Foreign Application Priority Data.

(65) US 2013/0307738 A1 Nov. 21, 2013

(30) **Foreign Application Priority Data**

Jan. 26, 2011 (JP) 2011-013622

Publication Classification

(51) **Int. Cl.**
H01Q 21/00 (2006.01)

(52) **U.S. Cl.**
CPC ***H01Q 21/0006*** (2013.01)
USPC **343/720**; 343/851

(57) **ABSTRACT**

The antenna device includes a first antenna **11** that includes a first ground terminal **12**; a second antenna **18** that includes a second ground terminal **20**; a ground conductor **28** to which the first antenna **11** is connected through the first ground terminal **12** and the second antenna **18** is connected through the second ground terminal **20**; and a phase shifter **24** that controls a phase difference between a first current ie**1** and a second current ie**2**. The phase shifter **24** controls the phase difference between the first current ie**1** and the second current ie**2** so that the first current ie**1** and the second current ie**2** have components to cancel each other.

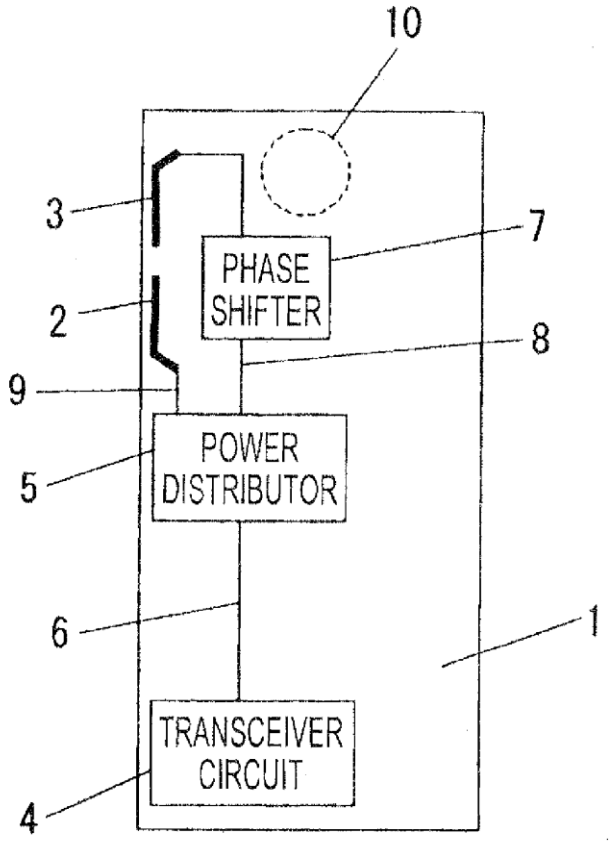

US 20140152517A1

(19) United States

(12) Patent Application Publication

SU et al.

(10) Pub. No.: US 2014/0152517 A1

(43) Pub. Date: Jun. 5, 2014

(54) **ANTENNA STRUCTURE FOR MIMO APPLICATION**

(71) Applicant: **HON HAI PRECISION INDUSTRY CO., LTD.**, New Taipei (TW)

(72) Inventors: **WEI-CHENG SU**, New Taipei (TW); **CHIEN-CHANG LIU**, New Taipei (TW); **YEN-HUI LIN**, New Taipei (TW)

(73) Assignee: **HON HAI PRECISION INDUSTRY CO., LTD.**, New Taipei (TW)

(21) Appl. No.: **14/062,818**

(22) Filed: **Oct. 24, 2013**

(30) **Foreign Application Priority Data**

Nov. 30, 2012 (TW) 101144870

Publication Classification

(51) **Int. Cl.**
H01Q 21/28 (2006.01)

(52) **U.S. Cl.**
CPC *H01Q 21/28* (2013.01)
USPC **343/725**

(57) **ABSTRACT**

An antenna structure for MIMO application includes a substrate, a first antenna element, and a second antenna element. A metal ground layer covers a portion of a first surface of the substrate, and the first antenna element is arranged on the metal ground layer. The first antenna element includes an open-slot, which extending from an edge of the metal ground layer toward an inner portion of the metal ground layer, and a signal feed-in member arranged on a second surface of the substrate and spatially corresponding to an open end of the open-slot. The second antenna element is arranged on the first surface of the substrate adjacent to the first antenna element and extending away from the metal ground layer, and includes a signal feed-in portion arranged adjacent to the open end of the open-slot, and electronically connects to the signal feed-in member.

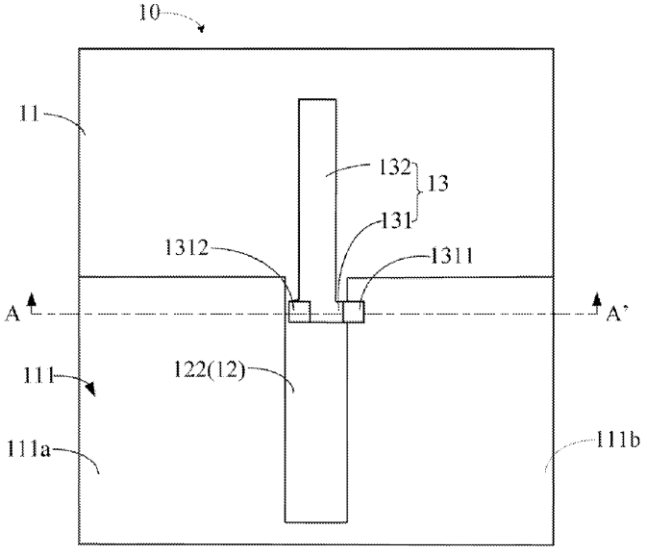

(a)

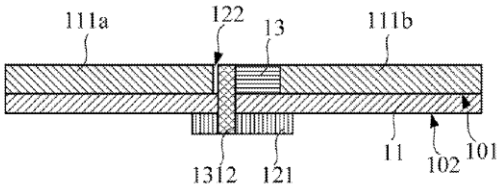

(b)

US 20140152518A1

(19) United States

(12) Patent Application Publication

Choudhury et al.

(10) Pub. No.: US 2014/0152518 A1

(43) Pub. Date: Jun. 5, 2014

(54) **DUAL-BAND FOLDED META-INSPIRED ANTENNA WITH USER EQUIPMENT EMBEDDED WIDEBAND CHARACTERISTICS**

(71) Applicants: **Debabani Choudhury**, Thousand Oaks, CA (US); **Ana Yepes**, Hillsboro, OR (US); **Vinay Gowda**, Folsom, CA (US)

(72) Inventors: **Debabani Choudhury**, Thousand Oaks, CA (US); **Ana Yepes**, Hillsboro, OR (US); **Vinay Gowda**, Folsom, CA (US)

(21) Appl. No.: **13/692,186**

(22) Filed: **Dec. 3, 2012**

Publication Classification

(51) **Int. Cl.**
H01Q 5/00 (2006.01)
H01Q 13/10 (2006.01)

(52) **U.S. Cl.**
CPC ***H01Q 5/0003*** (2013.01); ***H01Q 13/106*** (2013.01)
USPC **343/729**; 343/767

(57) **ABSTRACT**

Embodiments of a folded meta-inspired antenna for dual-band operation and user equipment for dual-band operation in a wireless network are generally described herein. In some embodiments, the folded meta-inspired antenna may include first and second conductive layers disposed on opposite sides of a substrate to provide a wideband distributed structure comprising a plurality of high-Q resonances resulting from, at least in part, metamaterial-based loading. Conductive material on the first side of the substrate is arranged around a central longitudinal slot coupled with a plurality of perpendicular slots. For dual-band operation, the folded meta-inspired antenna may operate as a folded monopole at a higher frequency band and operate as a slot-type radiator at a lower frequency band. The plurality of resonances may cause the folded meta-inspired antenna to achieve broader bandwidth at both lower and higher frequency bands.

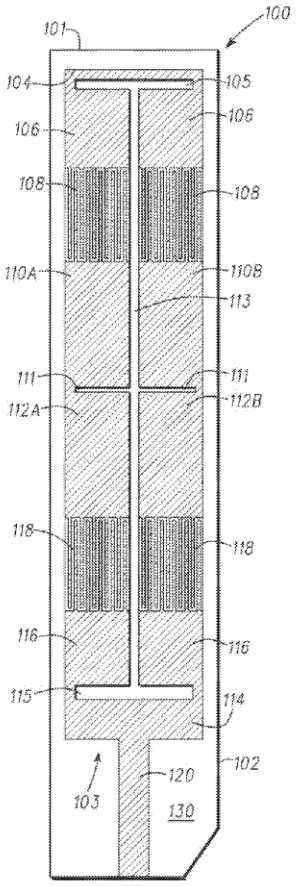

US 20140152522A1

(19) United States

(12) Patent Application Publication

Karkinen et al.

(10) Pub. No.: US 2014/0152522 A1

(43) Pub. Date: Jun. 5, 2014

(54) **APPARATUS WITH ANTENNA AND METHOD FOR WIRELESS COMMUNICATION**

(75) Inventors: **Jouni Vesa Juhani Karkinen**, Oulu (FI); **Marko Tapio Autti**, Oulu (FI)

(73) Assignee: **Nokia Corporation**, Espoo (FI)

(21) Appl. No.: **14/130,980**

(22) PCT Filed: **Jul. 6, 2011**

(86) PCT No.: **PCT/IB2011/053002**

§ 371 (c)(1), (2), (4) Date: **Jan. 6, 2014**

Publication Classification

(51) **Int. Cl.**
H01Q 5/00 (2006.01)

(52) **U.S. Cl.**
CPC *H01Q 5/0093* (2013.01)
USPC **343/803**; 343/852

(57) **ABSTRACT**

An apparatus including a first port configured to couple to a first location on an antenna; a second port configured to couple to a second location on the antenna; a switch configured to switch between a first electrical configuration in which the first port is coupled to radio circuitry, and a second electrical configuration in which the second port is coupled to the radio circuitry; first reactive circuitry configured to impedance match the antenna with the radio circuitry at a first operational resonant frequency band; and second reactive circuitry, different to the first reactive circuitry, and configured to impedance match the antenna with the radio circuitry at a second operational resonant frequency band, different to the first operational resonant frequency band.

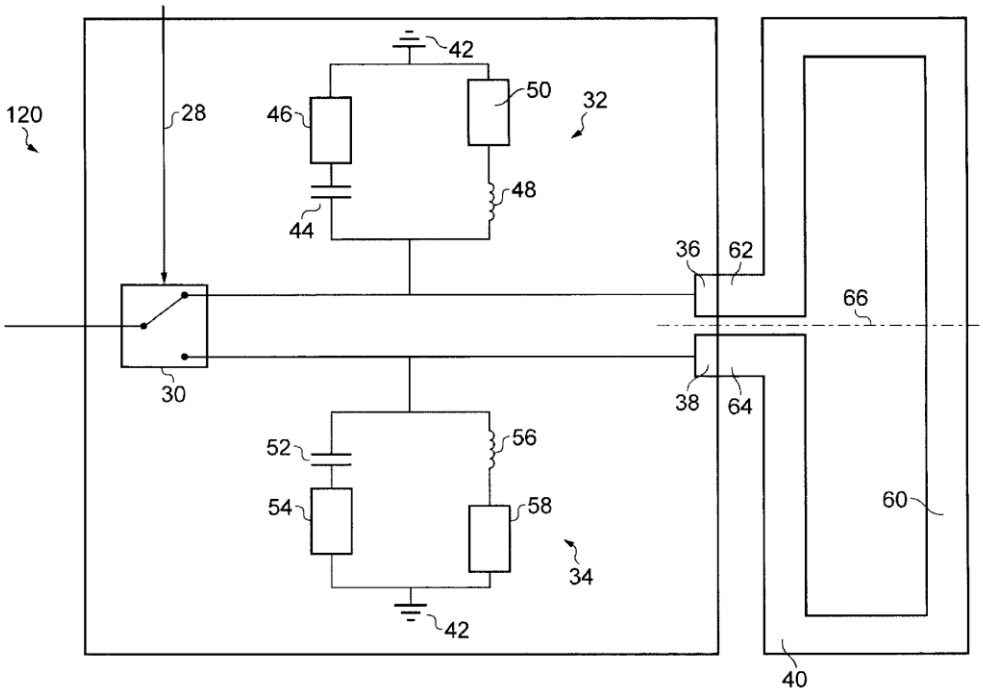

US 20140152523A1

(19) United States

(12) Patent Application Publication

(10) Pub. No.: US 2014/0152523 A1

(43) Pub. Date: Jun. 5, 2014

Wu et al.

(54) **DEVICE FOR DECOUPLING ANTENNAS IN COMPACT ANTENNA ARRAY AND ANTENNA ARRAY WITH THE DEVICE**

(71) Applicant: **THE CHINESE UNIVERSITY OF HONG KONG**, Hong Kong (CN)

(72) Inventors: **Ke-Li Wu**, Hong Kong (CN); **Luyu Zhao**, Xi'an (CN); **Lap Kun Yeung**, Hong Kong (CN)

(73) Assignee: **The Chinese University of Hong Kong**, Hong Kong (CN)

(21) Appl. No.: **13/691,227**

(22) Filed: **Nov. 30, 2012**

Publication Classification

(51) **Int. Cl.**
H01Q 1/52 (2006.01)

(52) **U.S. Cl.**
CPC *H01Q 1/523* (2013.01)
USPC **343/841**

(57) **ABSTRACT**

Devices and methods for decoupling two antennas in a compact antenna array and antenna arrays comprising the devices are disclosed. According to an embodiment, the device comprises a first resonator coupled with a source, the source being connected with a first antenna of the two antennas; and a second resonator coupled with the first resonator and a load, the load being connected with a second antenna of the two antennas, wherein the first and second resonators are configured so that a first coupling between the source and the first resonator, a second coupling between the first and second resonators, and a third coupling between the second resonator and the load are satisfied with a constraint that an isolation coefficient in a whole network composed of a first two-port network consisting of the two antennas and a second two-port network consisting of the first and second resonators in parallel approach zero as well as reflection coefficients of each port of the whole network are minimized.

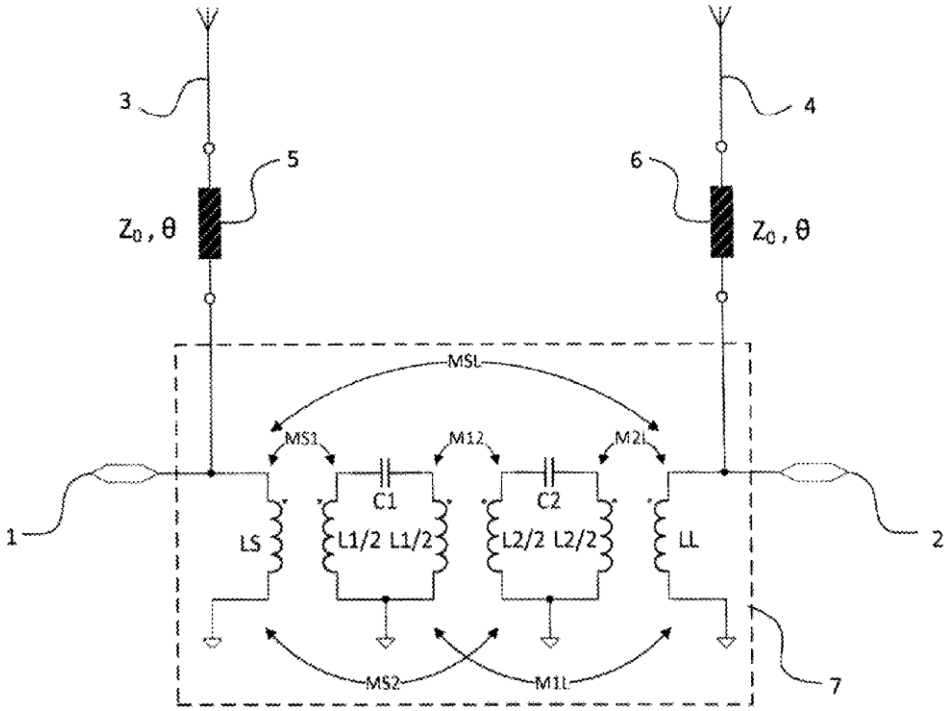

US 20140152524A1

(19) United States

(12) Patent Application Publication

TU et al.

(10) Pub. No.: US 2014/0152524 A1

(43) Pub. Date: Jun. 5, 2014

(54) **ANTENNA**

(71) Applicant: **HON HAI PRECISION INDUSTRY CO., LTD.**, New Taipei (TW)

(72) Inventors: **HSIN-LUNG TU**, New Taipei (TW); **CHE-MING CHANG**, New Taipei (TW)

(73) Assignee: **HON HAI PRECISION INDUSTRY CO., LTD.**, New Taipei (TW)

(21) Appl. No.: **13/849,531**

(22) Filed: **Mar. 24, 2013**

(30) **Foreign Application Priority Data**

Dec. 3, 2012 (TW) 101145362

Publication Classification

(51) **Int. Cl.**
H01Q 1/38 (2006.01)

(52) **U.S. Cl.**
CPC ***H01Q 1/38*** (2013.01)
USPC ..... **343/843**; 343/700 MS

(57) **ABSTRACT**

An antenna includes a base, a ground layer printed on the base, a first antenna portion, a second antenna portion, and an isolation slot defined in the grounded layer. The isolation slot is arranged between the first antenna portion and the second antenna portion to reduce the interference between the first antenna portion and the second antenna portion.

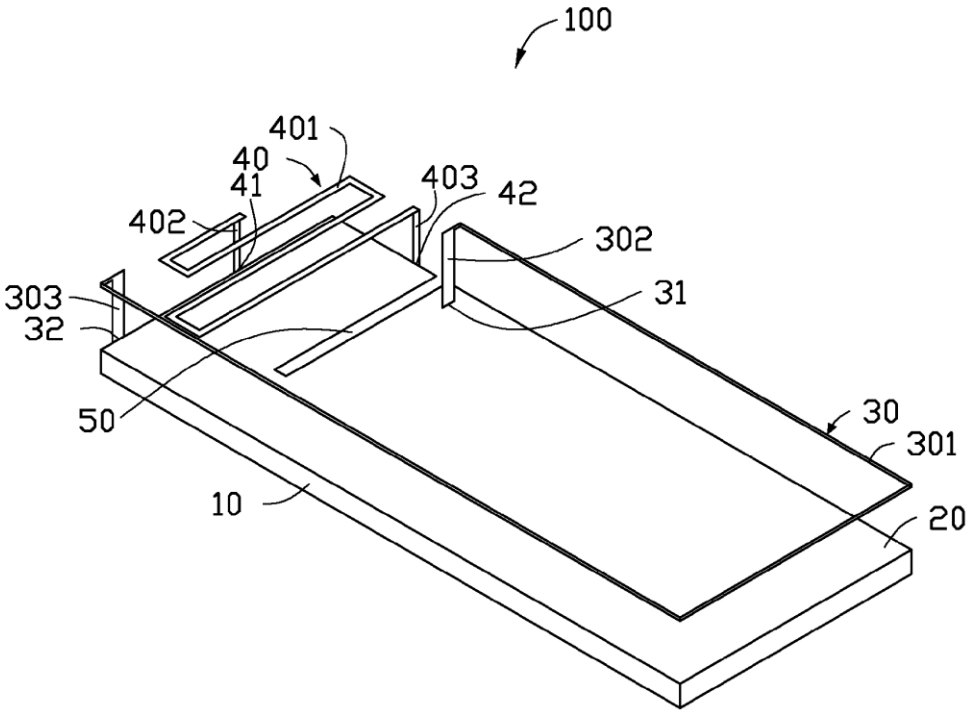

US 20140159971A1

(19) United States

(12) Patent Application Publication

Hall et al.

(10) Pub. No.: US 2014/0159971 A1

(43) Pub. Date: Jun. 12, 2014

(54) **MULTI-OUTPUT ANTENNA**

(75) Inventors: **Peter Hall**, Birmingham (GB); **Zhenhua Hu**, Solihull (GB)

(73) Assignee: **THE UNIVERSITY OF BIRMINGHAM**, Birmingham (GB)

(21) Appl. No.: **14/234,951**

(22) PCT Filed: **Jul. 26, 2012**

(86) PCT No.: **PCT/GB2012/051799**

§ 371 (c)(1), (2), (4) Date: **Jan. 24, 2014**

(30) **Foreign Application Priority Data**

Jul. 26, 2011 (GB) 1112839.4

Publication Classification

(51) **Int. Cl.**
H01Q 21/00 (2006.01)

(52) **U.S. Cl.**
CPC *H01Q 21/0006* (2013.01)
USPC **343/745**

(57) **ABSTRACT**

A reconfigurable multi-output antenna (**16**) is disclosed comprising: one or more radiating elements (**12**, **14**), at least two matching circuits (**42**, **44**, **50**, **52**) coupled to the or each radiating element (**12**, **14**) via e.g. a splitter (**30**, **32**) or a diplxer; and wherein each matching circuit (**42**, **44**, **50**, **52**) is associated with a separate port (**38**, **40**, **46**, **48**) arranged to drive a separate resonant frequency so that the or each radiating element (**12**, **14**) is operable to provide multiple outputs simultaneously. The resonant frequency of each output is independently controllable by each matching circuit, with good isolation with each other port, thereby offering very wide operating frequency range with simultaneous multi-independent output operations. Also described is a multi-output antenna control module for coupling to one or more radiating elements, an antenna structure and an antenna interface module. A reconfigurable multi-output antenna is disclosed comprising: one or more radiating

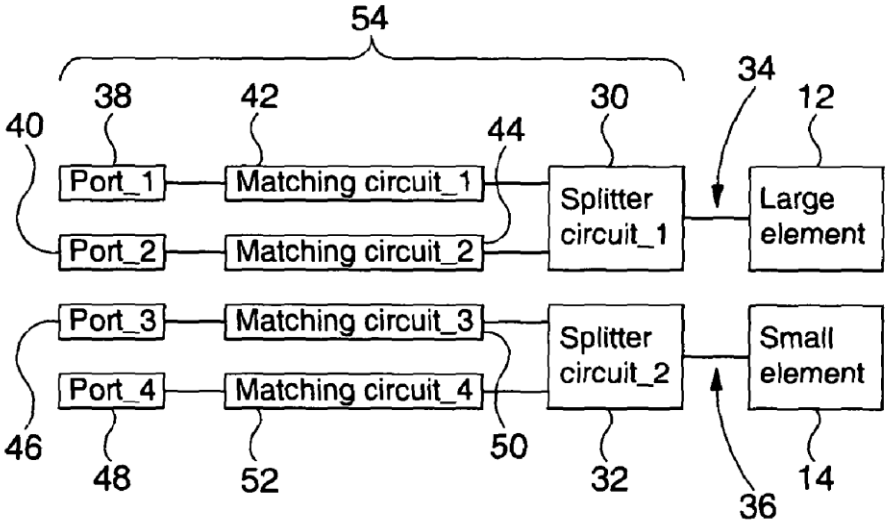

US 20140159981A1

(19) United States

(12) Patent Application Publication

WANG

(10) Pub. No.: US 2014/0159981 A1

(43) Pub. Date: Jun. 12, 2014

(54) **PCB APPLIED TO WIRELESS TERMINAL AND WIRELESS TERMINAL**

(71) Applicant: **Huawei Device Co., Ltd.**, Shenzhen (CN)

(72) Inventor: **Hanyang WANG**, Shenzhen (CN)

(73) Assignee: **Huawei Device Co., Ltd.**, Shenzhen (CN)

(21) Appl. No.: **14/143,896**

(22) Filed: **Dec. 30, 2013**

Related U.S. Application Data

(63) Continuation-in-part of application No. PCT/CN2012/086154, filed on Dec. 7, 2012.

Publication Classification

(51) **Int. Cl.**
H01Q 1/52 (2006.01)

(52) **U.S. Cl.**
CPC *H01Q 1/521* (2013.01)
USPC **343/841**

(57) **ABSTRACT**

Embodiments of the present disclosure provide a PCB connected to a wireless terminal and a wireless terminal. In the embodiments of the present disclosure, distribution of current on a PCB may be changed by resonance current that is generated by a resonant component included in the PCB, so that isolation between at least two antennas increases. In addition, due to existence of the resonance current, electromagnetic radiation capability of the PCB may be increased, so that radiation efficiency of each antenna increases, thereby improving wireless performance of the wireless terminal and effectively ensuring wireless performance of the wireless terminal in various application scenarios. Furthermore, the wireless terminal provided in the embodiment of the present disclosure is simple and easy to implement and has a low cost.

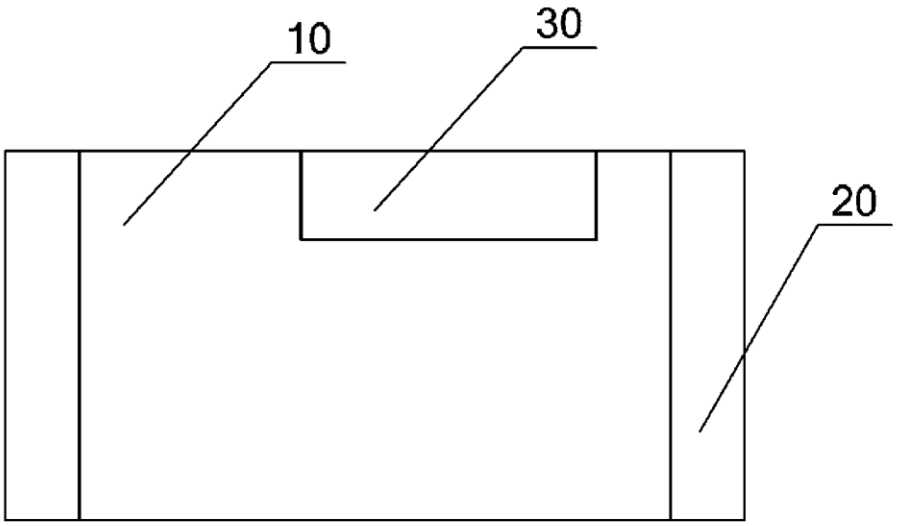

US 20140159982A1

(19) United States

(12) Patent Application Publication

De Luis et al.

(10) Pub. No.: US 2014/0159982 A1

(43) Pub. Date: Jun. 12, 2014

(54) **RECONFIGURABLE MONOPOLE ANTENNA FOR WIRELESS COMMUNICATIONS**

(71) Applicant: **MICROSOFT CORPORATION**, Redmond, WA (US)

(72) Inventors: **Javier Rodriguez De Luis**, Redmond, WA (US); **Alireza Mahanfar**, Bellevue, WA (US); **Benjamin Shewan**, Redmond, WA (US)

(73) Assignee: **MICROSOFT CORPORATION**, Redmond, WA (US)

(21) Appl. No.: **13/707,439**

(22) Filed: **Dec. 6, 2012**

Publication Classification

(51) **Int. Cl.**
H01Q 5/01 (2006.01)
H01Q 1/50 (2006.01)

(52) **U.S. Cl.**
CPC ... ***H01Q 5/01*** (2013.01); ***H01Q 1/50*** (2013.01)
USPC **343/843**; 343/852

(57) **ABSTRACT**

A reconfigurable monopole antenna is described which includes a radiator element coupled to a feed point through at least two different current paths. The current paths are of different lengths to accommodate different frequency bands. To change the current paths, a feed-point switch is positioned at the antenna feed point for selectively supplying current along either a first current path or a second current path. The current paths share a majority of the radiator element so that separate radiator elements need not be used.

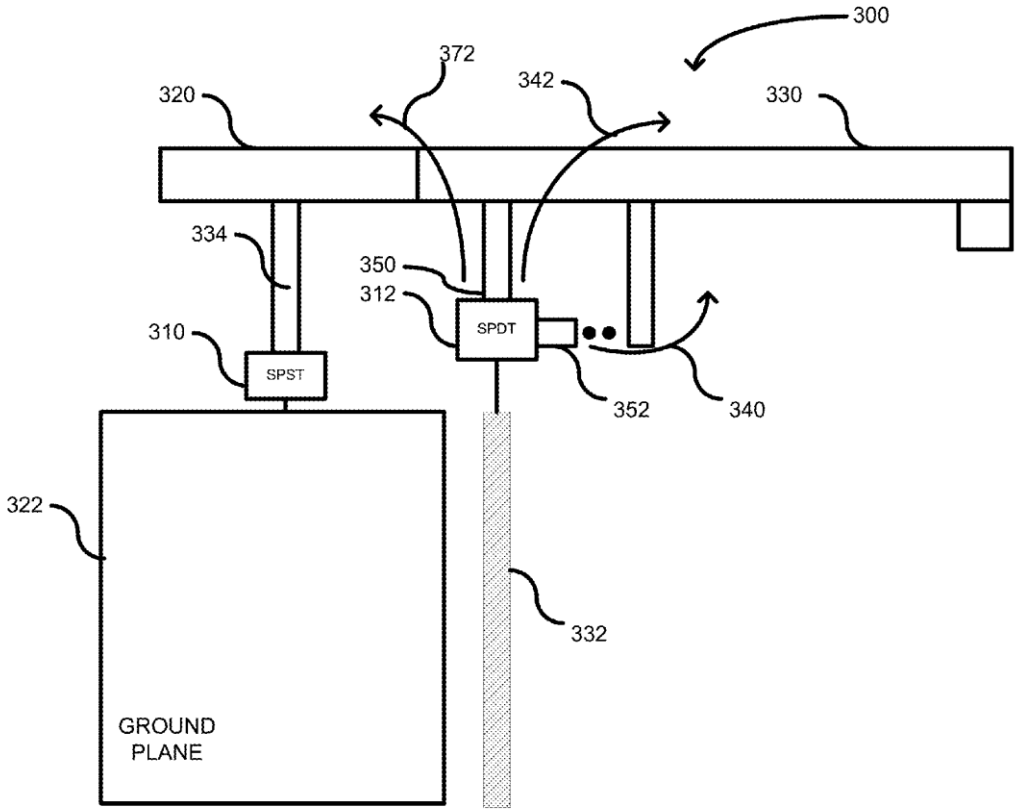

US 20140159984A1

(19) United States

(12) Patent Application Publication

KATO et al.

(10) Pub. No.: US 2014/0159984 A1

(43) Pub. Date: Jun. 12, 2014

(54) ANTENNA AND WIRELESS IC DEVICE

(71) Applicant: **Murata Manufacturing Co., Ltd.**, Nagaokakyo-shi (JP)

(72) Inventors: **Noboru KATO**, Takatsuki-shi (JP); **Yuya DOKAI**, Nagaokakyo-shi (JP)

(73) Assignee: **MURATA MANUFACTURING CO., LTD.**, Nagaokakyo-shi (JP)

(21) Appl. No.: **14/182,339**

(22) Filed: **Feb. 18, 2014**

Related U.S. Application Data

(63) Continuation of application No. 13/083,626, filed on Apr. 11, 2011, now Pat. No. 8,692,718, which is a continuation of application No. PCT/JP2009/069486, filed on Nov. 17, 2009.

(30) **Foreign Application Priority Data**

Nov. 17, 2008 (JP) 2008-293619
Jul. 22, 2009 (JP) 2009-171644

Publication Classification

(51) **Int. Cl.**
H01Q 9/04 (2006.01)

(52) **U.S. Cl.**
CPC ***H01Q 9/045*** (2013.01)
USPC ..... **343/843**; 343/700 MS

(57) **ABSTRACT**

An antenna and a wireless IC device that includes the antenna are provided for which the manufacturing process is simple and for which there is a low probability of a poor connection occurring between a feeder portion and a radiation electrode. An antenna includes a radiation electrode that is provided on a main surface of an insulator board, a ground electrode and/or a counter electrode that is arranged so as to oppose the radiation electrode, and a magnetic field electrode that is connected to the radiation electrode through a connection portion. The magnetic field electrode is defined by line-shaped electrodes and feeds a signal to the radiation electrode from a feeder portion defined by ends of the line-shaped electrodes through the magnetic field electrode.

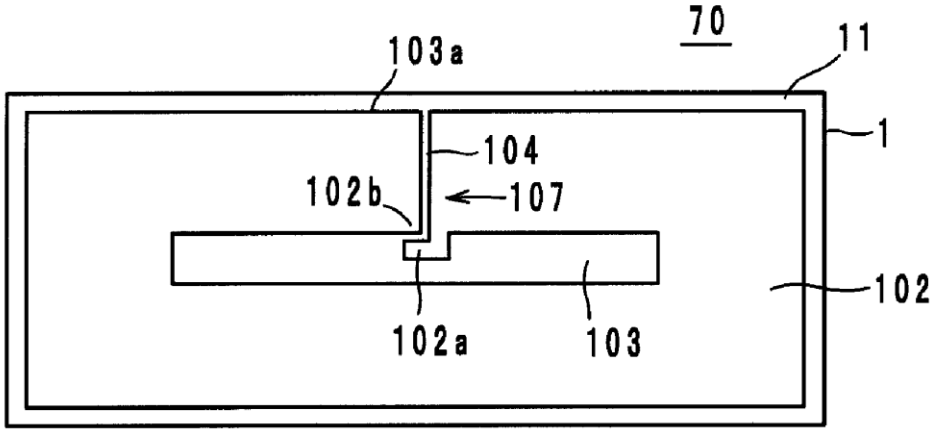

US 20140159989A1

(19) United States

(12) Patent Application Publication

Malek et al.

(10) Pub. No.: US 2014/0159989 A1

(43) Pub. Date: Jun. 12, 2014

(54) **ADJUSTABLE ANTENNA STRUCTURES FOR ADJUSTING ANTENNA PERFORMANCE IN ELECTRONIC DEVICES**

(71) Applicant: **APPLE INC.**, Cupertino, CA (US)

(72) Inventors: **Shayan Malek**, San Jose, CA (US); **John B. Ardisana, II**, San Francisco, CA (US); **Michael B. Wittenberg**, Sunnyvale, CA (US)

(73) Assignee: **Apple Inc.**, Cupertino, CA (US)

(21) Appl. No.: **13/706,758**

(22) Filed: **Dec. 6, 2012**

Publication Classification

(51) **Int. Cl.**

H01Q 1/50 (2006.01)

H01P 11/00 (2006.01)

(52) **U.S. Cl.**

CPC . ***H01Q 1/50*** (2013.01); ***H01P 11/00*** (2013.01)

USPC **343/876**; 29/601

(57) **ABSTRACT**

Adjustable antenna structures may be used to compensate for manufacturing variations in electronic device antennas. An electronic device antenna may have an antenna feed and conductive structures such as portions of a peripheral conductive electronic device housing member and other conductive antenna structures. The adjustable antenna structures may have a movable dielectric support. Multiple conductive paths may be formed on the dielectric support. The movable dielectric support may be installed within an electronic device housing so that a selected one of the multiple conductive paths is coupled into use to convey antenna signals. Coupling the selected path into use adjusts the position of an antenna feed terminal for the antenna feed and compensates for manufacturing variations in the conductive antenna structures that could potentially lead to undesired variations in antenna performance.

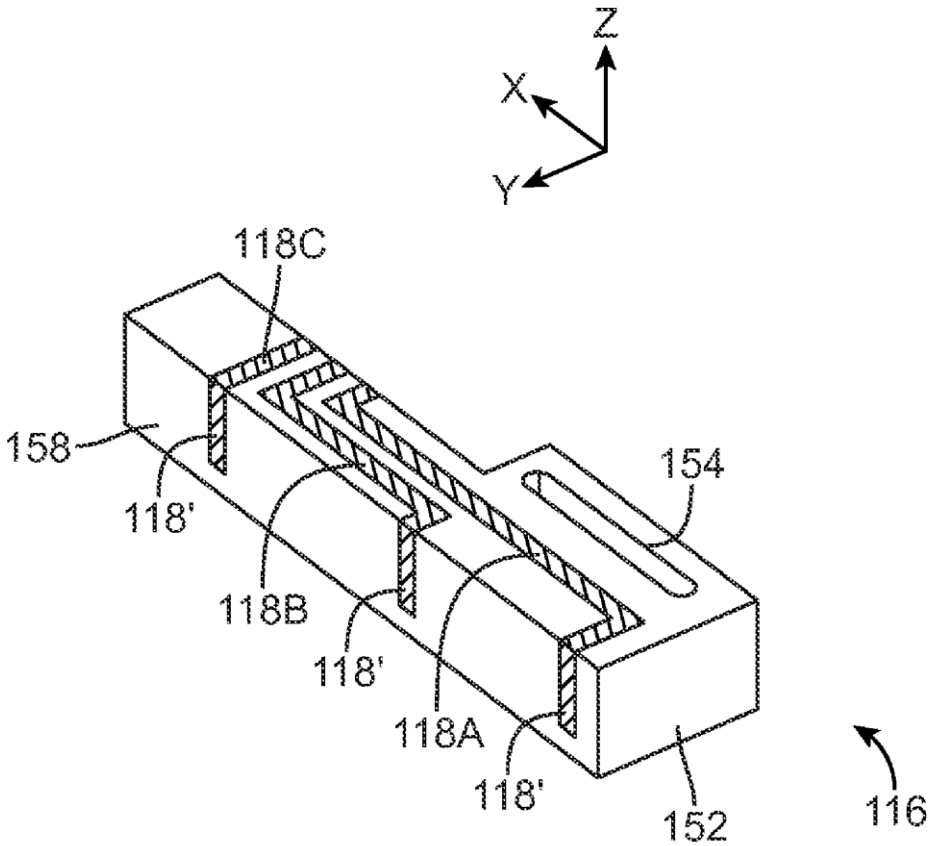

US 20140159990A1

(19) United States

(12) Patent Application Publication

Azhari

(10) Pub. No.: US 2014/0159990 A1

(43) Pub. Date: Jun. 12, 2014

(54) **ANTENNA MOUNTED ON A CIRCUIT BOARD**

(71) Applicant: **OPTICON SENSORS EUROPE B.V.**, Hoofddorp (NL)

(72) Inventor: **Alexander Azhari**, Spanga (SE)

(73) Assignee: **OPTICON SENSORS EUROPE B.V.**, Hoofddorp (NL)

(21) Appl. No.: **13/711,190**

(22) Filed: **Dec. 11, 2012**

Publication Classification

(51) **Int. Cl.**
H01Q 1/22 (2006.01)
H01P 11/00 (2006.01)

(52) **U.S. Cl.**
CPC . ***H01Q 1/22*** (2013.01); ***H01P 11/00*** (2013.01)
USPC **343/878**; 29/600; 29/601

(57) **ABSTRACT**

An electronic circuit that needs to transmit or receive radio waves achieves that goal by using an antenna. This disclosure teaches an antenna that can be mounted on an edge of a circuit board. This disclosure teaches antenna shapes that, when mounted on an edge of a circuit board, can advantageously make contact with circuits on both sides of the board. Some antenna shapes have protruding portions with springiness that facilitates affixing the antenna to the board and facilitates reliable electrical contacts with the circuits. The disclosure also teaches methods for mounting an antenna on an edge of a circuit board.

antenna mounted on a board with a prong 1000

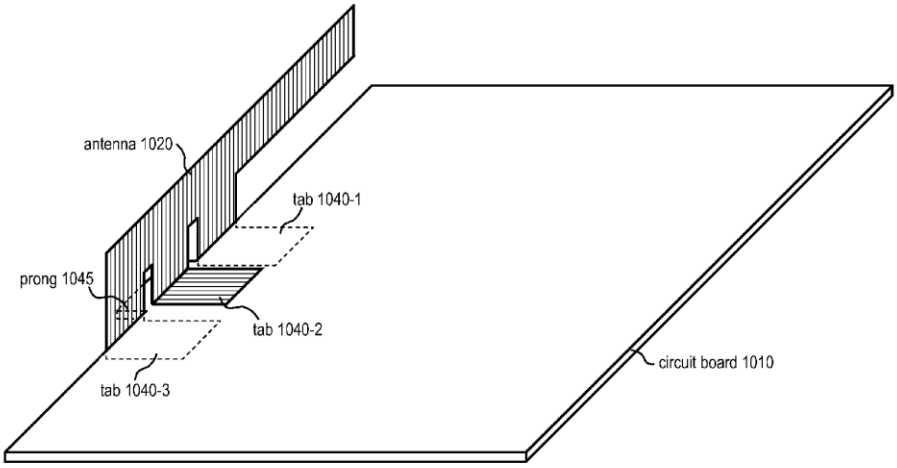

US 20140162566A1

(19) United States

(12) Patent Application Publication

Desclos et al.

(10) Pub. No.: US 2014/0162566 A1

(43) Pub. Date: Jun. 12, 2014

(54) **MODAL COGNITIVE DIVERSITY FOR MOBILE COMMUNICATION SYSTEMS**

(71) Applicant: **ETHERTRONICS, INC.**, San Diego, CA (US)

(72) Inventors: **Laurent Desclos**, San Diego, CA (US); **Sebastian Rowson**, San Diego, CA (US); **Jeffrey Shamblin**, San Marcos, CA (US)

(73) Assignee: **Ethertronics, Inc.**, San Diego, CA (US)

(21) Appl. No.: **13/707,506**

(22) Filed: **Dec. 6, 2012**

Publication Classification

(51) **Int. Cl.**
H04B 7/04 (2006.01)

(52) **U.S. Cl.**
CPC ***H04B 7/0404*** (2013.01)
USPC **455/67.13**; 455/575.7

(57) **ABSTRACT**

A system and method for antenna diversity in a communication system are provided, the system including multiple antennas, including at least one modal antenna, wherein each of the at least one modal antenna has multiple modes corresponding to multiple radiation patterns, and a processor coupled to the multiple antennas and configured to select a mode among the multiple modes to optimize signal quality for each time interval based on a CQI.

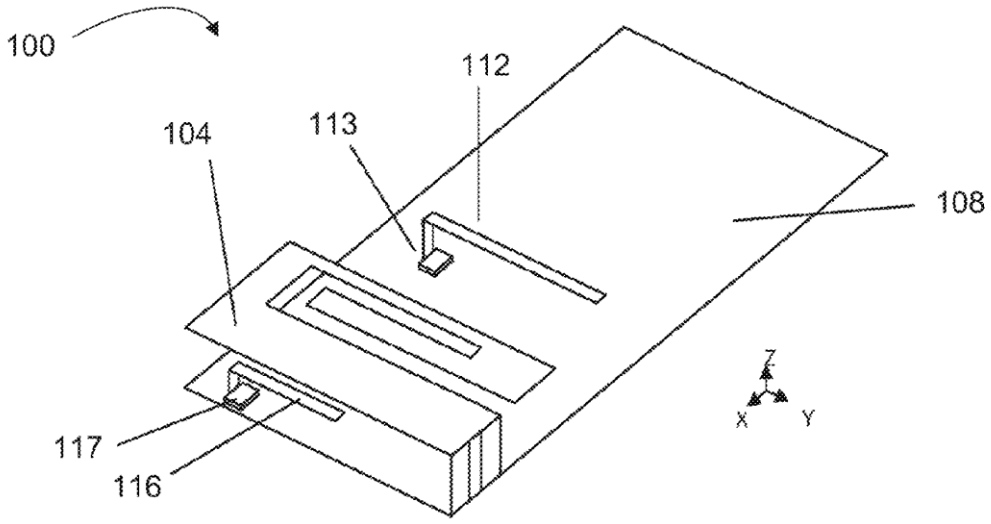

US 20140162572A1

(19) United States

(12) Patent Application Publication

Hirabayashi

(10) Pub. No.: US 2014/0162572 A1

(43) Pub. Date: Jun. 12, 2014

(54) ANTENNA DEVICE AND COMMUNICATION DEVICE

(71) Applicant: **Sony Corporation**, Tokyo (JP)

(72) Inventor: **Takayuki Hirabayashi**, Tokyo (JP)

(73) Assignee: **Sony Corporation**, Tokyo (JP)

(21) Appl. No.: **14/097,790**

(22) Filed: **Dec. 5, 2013**

(30) **Foreign Application Priority Data**

Dec. 12, 2012 (JP) 2012-271217

Publication Classification

(51) **Int. Cl.**

H01Q 1/52 (2006.01)

H04B 7/06 (2006.01)

(52) **U.S. Cl.**

CPC ***H01Q 1/525*** (2013.01); ***H04B 7/0697*** (2013.01)

USPC **455/73**; 343/893; 343/850

(57) **ABSTRACT**

There is provided an antenna device including a first antenna including a first power supply section, a first short-circuited section connected to a bottom board, and a first open-circuited section, and a second antenna including a second power supply section separated from the first power supply section by an electric path length of about nλ/4, a second short-circuited section connected to the bottom board, and a second open-circuited section.

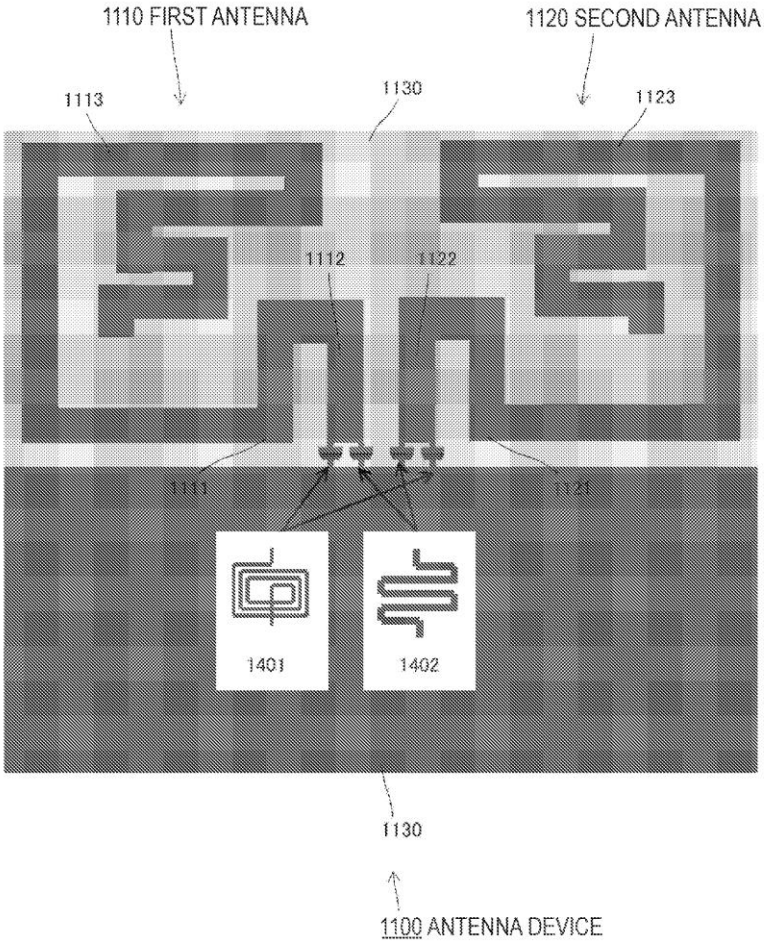

US 20140162574A1

(19) United States

(12) Patent Application Publication

ROUSU et al.

(10) Pub. No.: US 2014/0162574 A1

(43) Pub. Date: Jun. 12, 2014

(54) **MOBILE COMMUNICATION**

(71) Applicant: **BROADCOM CORPORATION**, Irvine, CA (US)

(72) Inventors: **Seppo ROUSU**, Oulu (FI); **Samuel VEHKALAHTI**, Haukipudas (FI)

(73) Assignee: **BROADCOM CORPORATION**, Irvine, CA (US)

(21) Appl. No.: **14/101,773**

(22) Filed: **Dec. 10, 2013**

(30) **Foreign Application Priority Data**

Dec. 10, 2012 (GB) 1222189.1

Publication Classification

(51) **Int. Cl.**

H04B 1/44 (2006.01)

H04W 52/04 (2006.01)

(52) **U.S. Cl.**

CPC ***H04B 1/44*** (2013.01); ***H04W 52/04*** (2013.01)

USPC **455/78**

(57) **ABSTRACT**

An apparatus for use in a mobile device includes a switch unit configured to switch a common connection of a transmitter and a first receiver from a first antenna to a second antenna and a connection of a respective second receiver from the second antenna to the first antenna; and a processing system configured to detect a switch condition that the transmitter needs to transmit via the second antenna, obtain power-related reception parameters of said first and said second receivers, cause the switch unit to switch the common connection of the transmitter and the first receiver so that the transmitter transmits via the second antenna, and adjust the power of the transmitter in dependence on the power-related reception parameters.

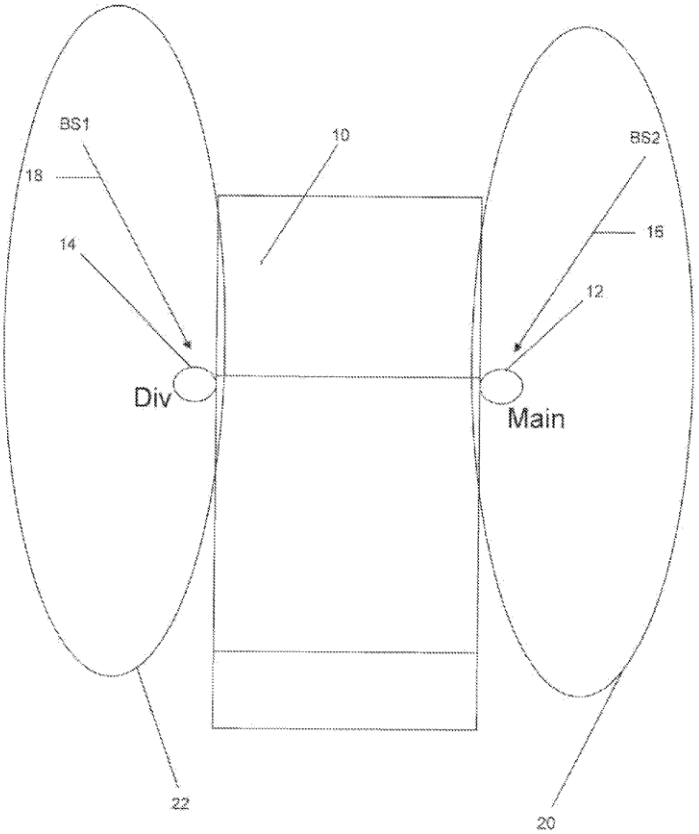

US 20140162719A1

(19) United States

(12) Patent Application Publication

Han et al.

(10) Pub. No.: US 2014/0162719 A1

(43) Pub. Date: Jun. 12, 2014

(54) TWO ANTENNAS IN CLOSE PROXIMITY WITH SIGNAL ISOLATION

(71) Applicant: **FUTUREWEI TECHNOLOGIES, CO.**, Plano, TX (US)

(72) Inventors: **Chulmin Han**, San Diego, CA (US); **Xiaomeng Su**, San Diego, CA (US)

(73) Assignee: **Futurewei Technologies, Co.**, Plano, TX (US)

(21) Appl. No.: **13/706,486**

(22) Filed: **Dec. 6, 2012**

Publication Classification

(51) **Int. Cl.**
H04W 88/06 (2006.01)

(52) **U.S. Cl.**
CPC *H04W 88/06* (2013.01)
USPC **455/552.1**

(57) **ABSTRACT**

Included is a mobile node (MN) comprising a first antenna configured to communicate with a wireless network, a second antenna configured to communicate with a wireless network, a first data line coupled to the first antenna, a second data line coupled to the second antenna, and a common ground trace coupled to the first data line and the second data line, wherein the first antenna and the second antenna are not directly connected to the common ground.

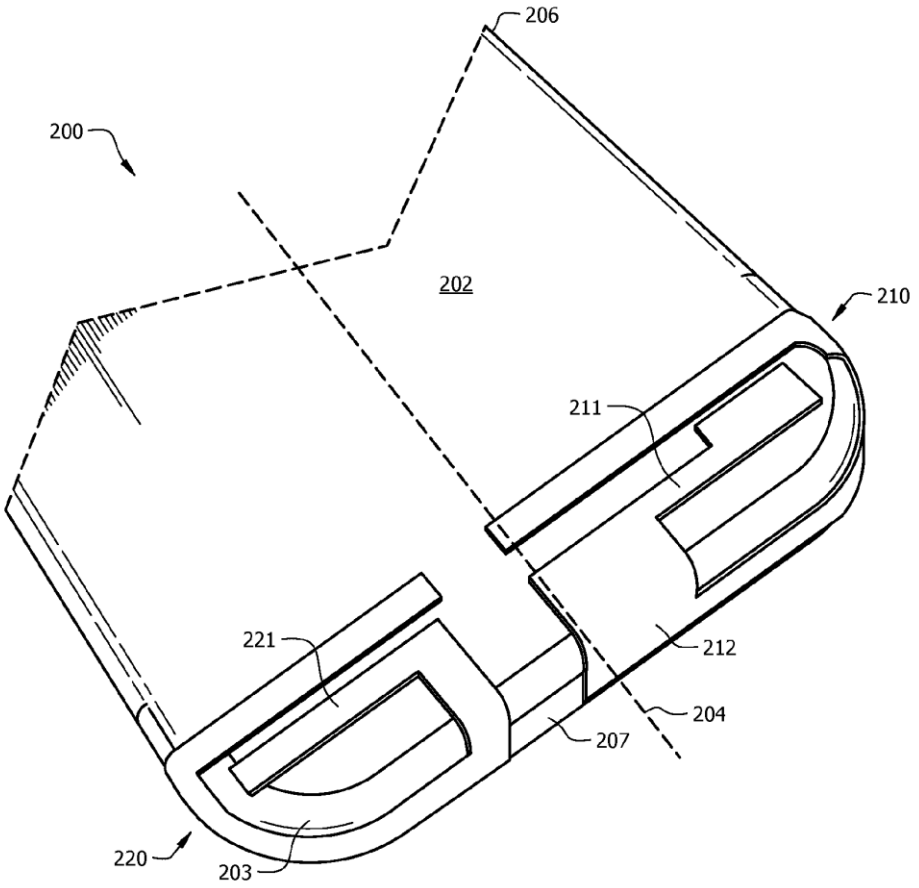

US 20140168015A1

(19) United States

(12) Patent Application Publication

KIM

(10) Pub. No.: US 2014/0168015 A1

(43) Pub. Date: Jun. 19, 2014

(54) **MOBILE COMMUNICATION TERMINAL**

(71) Applicant: **Pantech Co., Ltd.**, Seoul (KR)

(72) Inventor: **Gi Dae KIM**, Seoul (KR)

(73) Assignee: **Pantech Co., Ltd.**, Seoul (KR)

(21) Appl. No.: **14/026,504**

(22) Filed: **Sep. 13, 2013**

(30) **Foreign Application Priority Data**

Dec. 18, 2012 (KR) 10-2012-0148629

Publication Classification

(51) **Int. Cl.**

H01Q 5/00 (2006.01)

H01Q 1/24 (2006.01)

(52) **U.S. Cl.**

CPC ***H01Q 5/001*** (2013.01); ***H01Q 1/243*** (2013.01)

USPC ..... **343/702**; 343/700 MS

(57) **ABSTRACT**

A mobile communication terminal includes a case to house at least one component of the mobile communication terminal, an antenna having a power supply terminal and a first radiation pattern part, and a terminal insertion slot disposed in a portion of the case, in which a first portion of the first radiation pattern part extends from the power supply terminal towards a first end portion of the case, and a second portion of the first radiation pattern part extends from the first portion of the first radiation pattern part towards a second end portion of the case, and a plane of the second end portion of the case crosses a plane of the first end portion of the case.

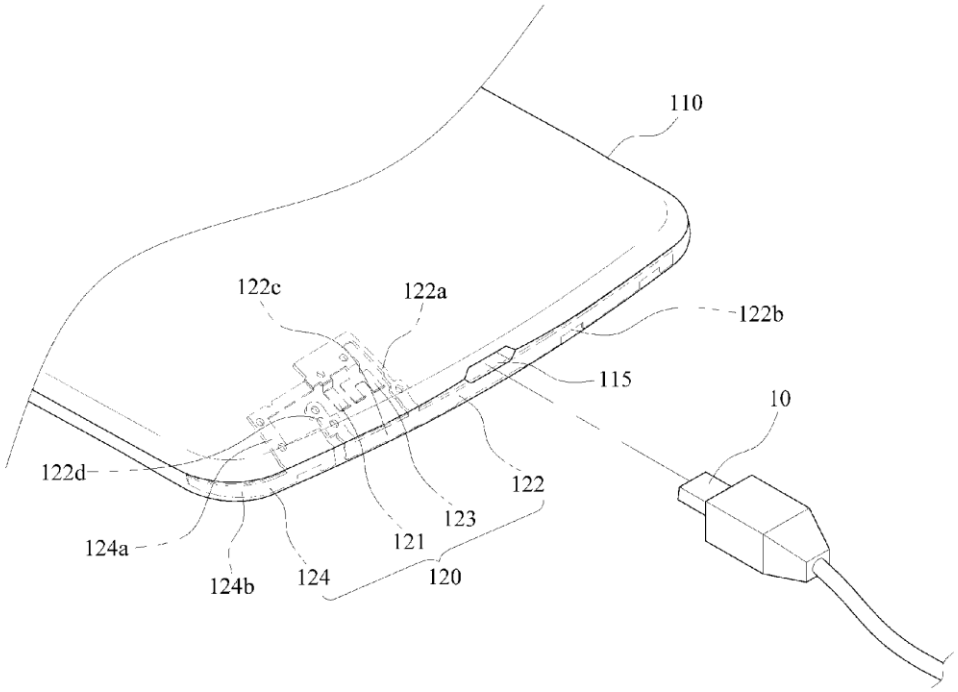

US 20140168016A1

(19) United States

(12) Patent Application Publication

BAE et al.

(10) Pub. No.: US 2014/0168016 A1

(43) Pub. Date: Jun. 19, 2014

(54) **RADIATOR FRAME HAVING ANTENNA PATTERN EMBEDDED THEREIN, ELECTRONIC DEVICE INCLUDING THE SAME, AND MOLD FOR MANUFACTURING THE SAME**

(71) Applicant: **SAMSUNG ELECTRO-MECHANICS CO., LTD.**, Suwon (KR)

(72) Inventors: **Sang Woo BAE**, Suwon (KR); **Dae Ki LIM**, Suwon (KR)

(73) Assignee: **SAMSUNG ELECTRO-MECHANICS CO., LTD.**, Suwon (KR)

(21) Appl. No.: **14/039,560**

(22) Filed: **Sep. 27, 2013**

(30) **Foreign Application Priority Data**

Dec. 14, 2012 (KR) 10-2012-0146589

Publication Classification

(51) **Int. Cl.**

B29C 45/14 (2006.01)

H01Q 1/22 (2006.01)

(52) **U.S. Cl.**

CPC ***B29C 45/14073*** (2013.01); ***H01Q 1/22*** (2013.01)

USPC ..... **343/702**; 343/700 MS; 425/129.1

(57) **ABSTRACT**

There are provided a radiator frame having an antenna pattern embedded therein, an electronic device including the same, and a mold for manufacturing thereof. The radiator frame includes a radiator including an antenna pattern part transmitting or receiving a signal and a terminal connection portion electrically connecting the antenna pattern part and a circuit substrate, and a molded frame formed by injection-molding the radiator so that the terminal connection portion is exposed to the other surface and the antenna pattern part is exposed to one surface opposite to the other surface, wherein the antenna pattern part includes one or more supporting holes so as to be fixed to an injection-molding mold, and the supporting hole is filled with the molded frame on the other surface.

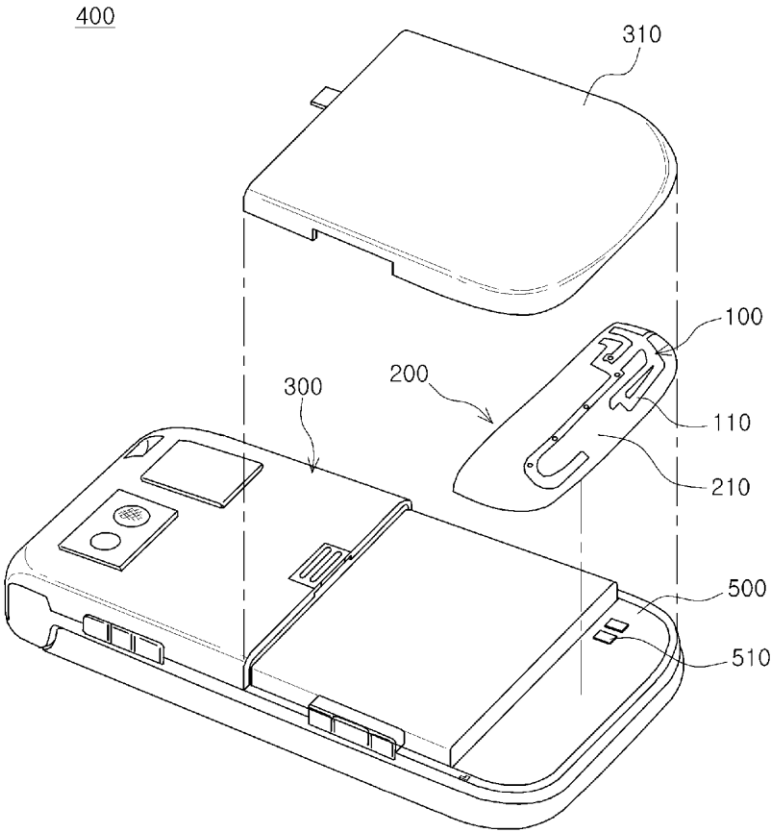

US 20140168017A1

(19) United States

(12) Patent Application Publication

Lim

(10) Pub. No.: US 2014/0168017 A1

(43) Pub. Date: Jun. 19, 2014

(54) **ANTENNA PATTERN FRAME HAVING ANTENNA PATTERN EMBEDDED THEREIN, ELECTRONIC DEVICE INCLUDING THE SAME, METHOD AND MOLD FOR MANUFACTURING THE SAME**

(71) Applicant: **SAMSUNG ELECTRO-MECHANICS CO., LTD.**, Suwon (KR)

(72) Inventor: **Dae Ki Lim**, Suwon (KR)

(73) Assignee: **SAMSUNG ELECTRO-MECHANICS CO., LTD.**, Suwon (KR)

(21) Appl. No.: **14/039,774**

(22) Filed: **Sep. 27, 2013**

(30) **Foreign Application Priority Data**

Dec. 14, 2012 (KR) 10-2012-0146588

Publication Classification

(51) **Int. Cl.**

B29C 45/14 (2006.01)

H01Q 1/22 (2006.01)

(52) **U.S. Cl.**

CPC ***B29C 45/14065*** (2013.01); ***H01Q 1/22*** (2013.01)

USPC .... **343/702**; 343/700 MS; 425/500; 264/261; 264/255

(57) **ABSTRACT**

There are provided an antenna pattern frame having an antenna pattern embedded therein, an electronic device including the same, a method of manufacturing the same, and a mold for manufacturing the same. The antenna pattern frame includes a radiator including an antenna pattern part transmitting or receiving a signal and a terminal connection portion electrically connecting the antenna pattern part and a circuit substrate; a radiator frame formed by injection-molding the radiator so that the terminal connection portion is exposed to the other surface and the antenna pattern part is exposed to one surface, and having a portion having the antenna pattern part protruded in a direction of one surface as opposed to directions of other portions; and a cover frame injection-molded so that the antenna pattern part is embedded between the radiator frame and the cover frame.

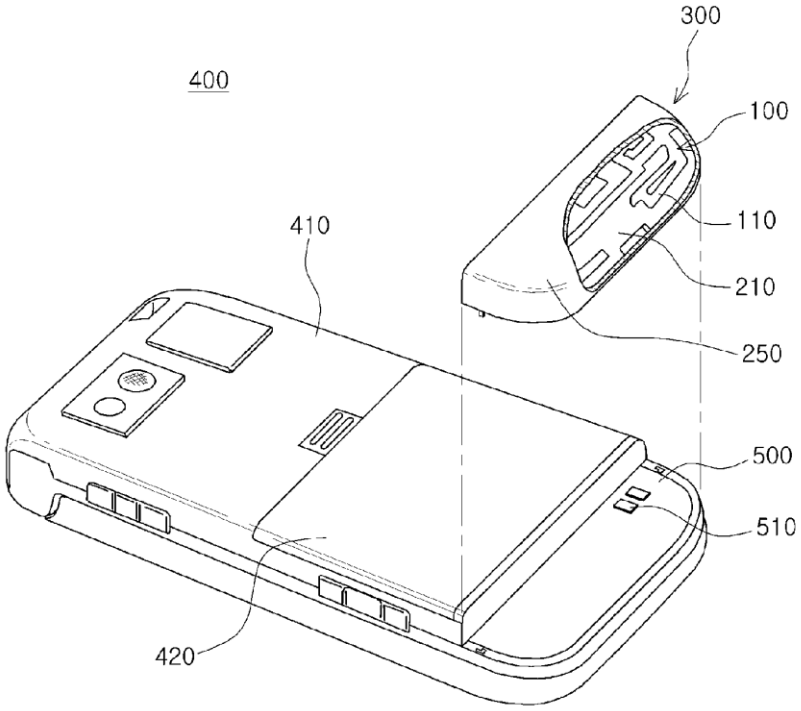

US 20140168021A1

(19) United States

(12) Patent Application Publication

PARK et al.

(10) Pub. No.: US 2014/0168021 A1

(43) Pub. Date: Jun. 19, 2014

(54) **ANTENNA MODULE AND ELECTRONIC APPARATUS INCLUDING THE SAME**

(71) Applicant: **Samsung Electronics Co., Ltd.**, Suwon-si (KR)

(72) Inventors: **Min-seok PARK**, Seoul (KR); **Chee-hwan YANG**, Yongin-si (KR)

(21) Appl. No.: **13/908,193**

(22) Filed: **Jun. 3, 2013**

(30) **Foreign Application Priority Data**

Dec. 18, 2012 (KR) 10-2012-0148359

Publication Classification

(51) **Int. Cl.**
H01Q 5/01 (2006.01)

(52) **U.S. Cl.**
CPC *H01Q 5/01* (2013.01)
USPC **343/749**

(57) **ABSTRACT**

An antenna module and an electronic apparatus include: an antenna element, and a clip which includes an antenna pattern, is formed of a metallic material, and electrically connects the antenna element to a circuit board to process an antenna signal through the antenna pattern.

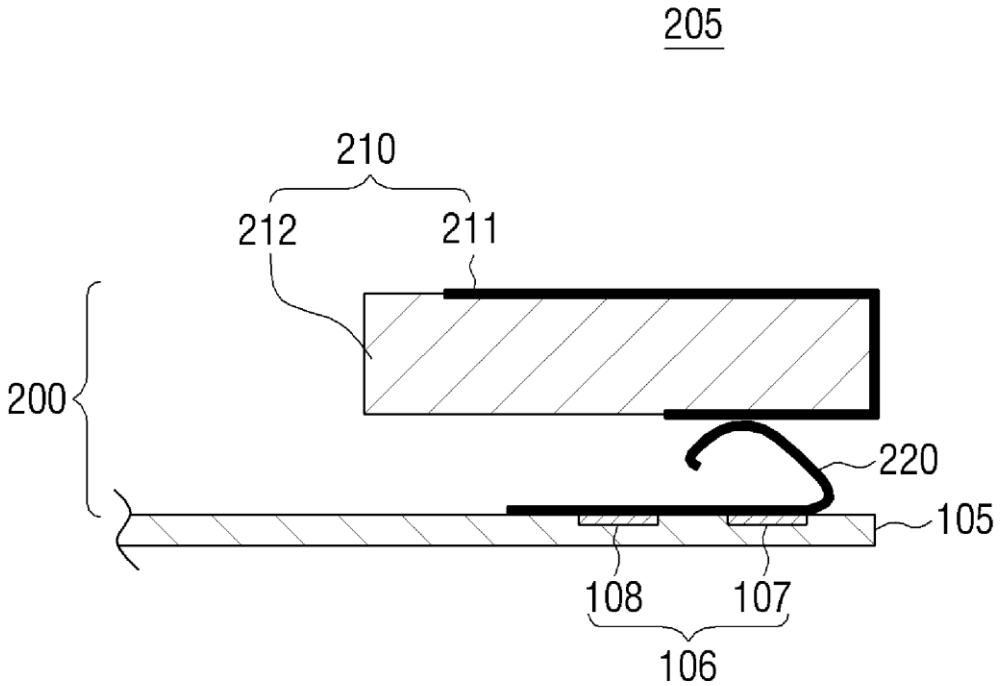

US 20140168023A1

(19) United States

(12) Patent Application Publication

Wolf

(10) Pub. No.: US 2014/0168023 A1

(43) Pub. Date: Jun. 19, 2014

(54) **ANTENNA HAVING PLANAR CONDUCTING ELEMENTS, ONE OF WHICH HAS A PLURALITY OF ELECTROMAGNETIC RADIATORS AND AN OPEN SLOT**

(71) Applicant: **PINYON TECHNOLOGIES, INC.**, Reno, NV (US)

(72) Inventor: **Forrest D. Wolf**, Reno, NV (US)

(21) Appl. No.: **13/915,479**

(22) Filed: **Jun. 11, 2013**

Related U.S. Application Data

(63) Continuation of application No. 12/777,103, filed on May 10, 2010, now Pat. No. 8,462,070.

Publication Classification

(51) **Int. Cl.**
H01Q 13/10 (2006.01)

(52) **U.S. Cl.**
CPC *H01Q 13/106* (2013.01)
USPC **343/767**

(57) **ABSTRACT**

An antenna includes a dielectric material having i) a first side opposite a second side, and a conductive via therein. A first planar conducting element is on the first side of the dielectric material and has an electrical connection to the conductive via. A second planar conducting element is also on the first side of the dielectric material. A gap electrically isolates the first and second planar conducting elements from each other. An electrical microstrip feed line on the second side of the dielectric material electrically connects to the conductive via and has a route that extends from the conductive via, to across the gap, to under the second planar conducting element. The first planar conducting element has a plurality of electromagnetic radiators, each having dimensions that cause it to resonate over a range of frequencies that differs from a range of frequencies over which an adjacent radiator resonates. At least first and second of the radiators bound an open slot in the first planar conducting element. The open slot has an orientation perpendicular to the gap.

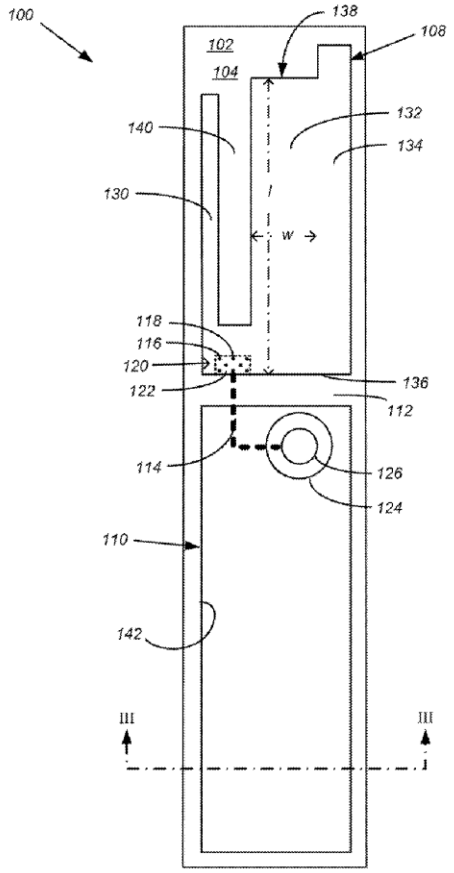

US 20140168025A1

(19) United States

(12) Patent Application Publication

Chang et al.

(10) Pub. No.: US 2014/0168025 A1

(43) Pub. Date: Jun. 19, 2014

(54) **ANTENNA SYSTEM FOR WIRELESS COMMUNICATION DEVICE**

(71) Applicant: **WISTRON NEWEB CORPORATION**, Hsinchu (TW)

(72) Inventors: **Ming-Feng Chang**, Hsinchu (TW); **Kai-Yang Cheng**, Hsinchu (TW)

(73) Assignee: **WISTRON NEWEB CORPORATION**, Hsinchu (TW)

(21) Appl. No.: **13/760,072**

(22) Filed: **Feb. 6, 2013**

(30) **Foreign Application Priority Data**

Dec. 13, 2012 (TW) 101147251

Publication Classification

(51) **Int. Cl.**

H01Q 21/28 (2006.01)

H01Q 13/10 (2006.01)

(52) **U.S. Cl.**

CPC ***H01Q 21/28*** (2013.01); ***H01Q 13/106*** (2013.01)

USPC **343/770**

(57) **ABSTRACT**

The present invention discloses an antenna system for a wireless communication device, which includes a first metal slice formed with a first slot structure, a second metal slice formed with a second slot structure, a first signal transmission line, and a second signal transmission line, wherein when the first metal slice and the second metal slice are not connected and have a distance between each other, a feeding direction of the first transmission corresponding to the first metal slice is substantially opposite to a feeding direction of the second transmission corresponding to the second metal slice; or when the first metal slice and the second metal slice are partially connected, a feeding direction of the first transmission corresponding to the first metal slice is substantially the same as or different to a feeding direction of the second transmission corresponding to the second metal slice.

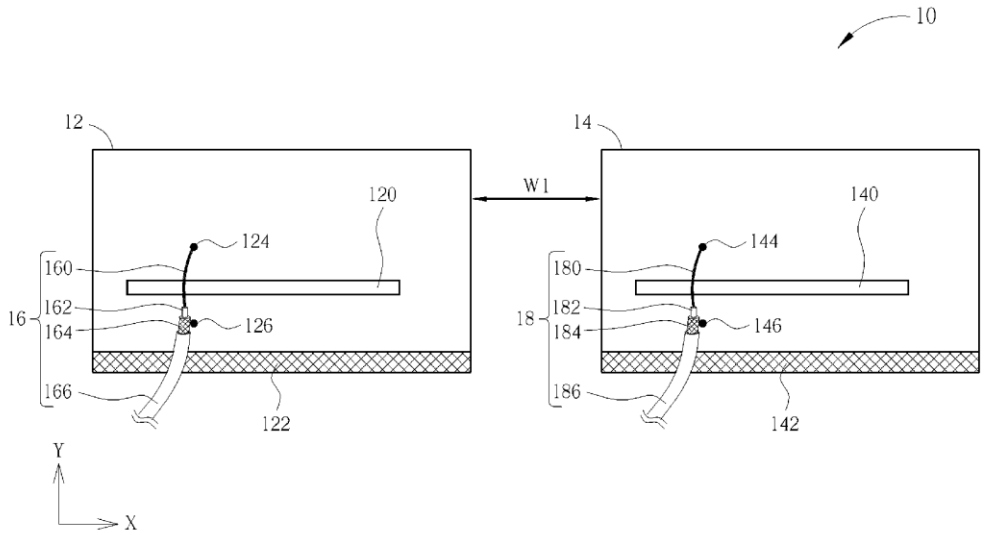

US 20140168028A1

(19) United States

(12) Patent Application Publication

(10) Pub. No.: US 2014/0168028 A1

(43) Pub. Date: Jun. 19, 2014

Yanagi et al.

(54) **ANTENNA DEVICE**

(71) Applicant: **FUJITSU COMPONENT LIMITED**, Tokyo (JP)

(72) Inventors: **Masahiro Yanagi**, Tokyo (JP); **Hideaki Yoda**, Tokyo (JP)

(73) Assignee: **FUJITSU COMPONENT LIMITED**, Tokyo (JP)

(21) Appl. No.: **14/088,575**

(22) Filed: **Nov. 25, 2013**

(30) **Foreign Application Priority Data**

Dec. 18, 2012 (JP) 2012-276101

Publication Classification

(51) **Int. Cl.**

H01Q 1/38 (2006.01)

H01Q 1/48 (2006.01)

(52) **U.S. Cl.**

CPC ... ***H01Q 1/38*** (2013.01); ***H01Q 1/48*** (2013.01)

USPC ..... **343/848**; 343/700 MS

(57) **ABSTRACT**

An antenna device includes a substrate; a first ground element that is arranged on the substrate; an antenna element that is arranged on the substrate and extends from its first end positioned near a side edge of the first ground element to its second end positioned away from the side edge; and a non-feed element that is arranged on the substrate, connected to the first ground element, and insulated from the antenna element. The non-feed element extends from its first end portion positioned near the side edge of the first ground element to a bending portion in a direction away from the side edge and extends from the bending portion to its second end portion along the side edge. A portion between the bending portion and the second end portion of the non-feed element intersects with the antenna element.

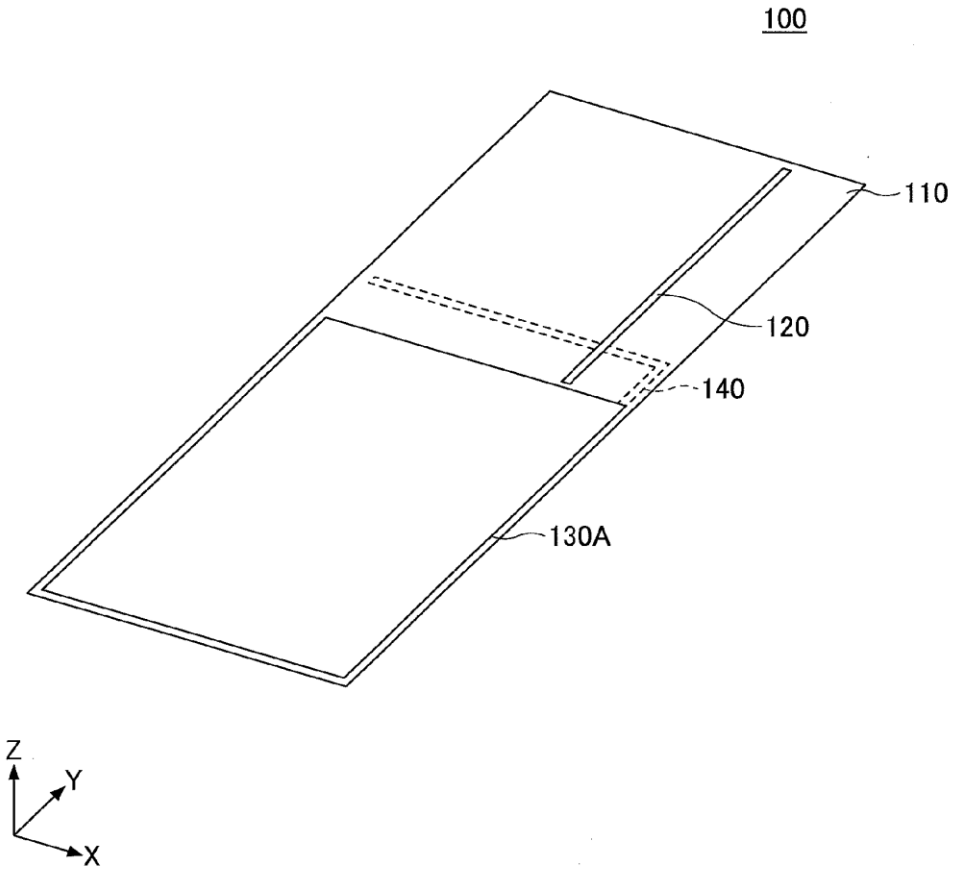

US 20140168029A1

(19) United States

(12) Patent Application Publication

HUANG et al.

(10) Pub. No.: US 2014/0168029 A1

(43) Pub. Date: Jun. 19, 2014

(54) **PRINTED ANTENNA MODULE APPLIED TO THE RF DETECTION PROCEDURE**

(71) Applicant: **Arcadyan Technology Corporation**, Hsinchu (TW)

(72) Inventors: **Chih-Yung HUANG**, Taichung City (TW); **Jian-Jhih DU**, Taipei City (TW); **Kuo-Chang LO**, Miaoli County (TW)

(73) Assignee: **ARCADYAN TECHNOLOGY CORPORATION**, Hsinchu (TW)

(21) Appl. No.: **13/963,356**

(22) Filed: **Aug. 9, 2013**

(30) **Foreign Application Priority Data**

Dec. 14, 2012 (TW) 101147350

Publication Classification

(51) **Int. Cl.**
H01Q 9/06 (2006.01)

(52) **U.S. Cl.**
CPC ***H01Q 9/06*** (2013.01)
USPC ..... **343/861**; 343/700 MS

(57) **ABSTRACT**

A printed antenna module applied to an RF detection procedure is provided. The module comprises a substrate, a ground terminal part, a feeding part, an antenna body, and a second connecting end. The substrate comprises a first surface and a second surface. The ground terminal part and the feeding part are disposed on the first surface. A first end of the feeding part corresponds to the ground terminal part. The antenna body, disposed on the first surface relative to the ground terminal part, comprises a first extending part. One end of the first extending part forms a first connecting end. The second connecting end is disposed on the first surface. The shapes of the first and the second connecting ends correspond to each other. A second end of the feeding part is connected to the second connecting end. An RF detection point is formed on the second surface.

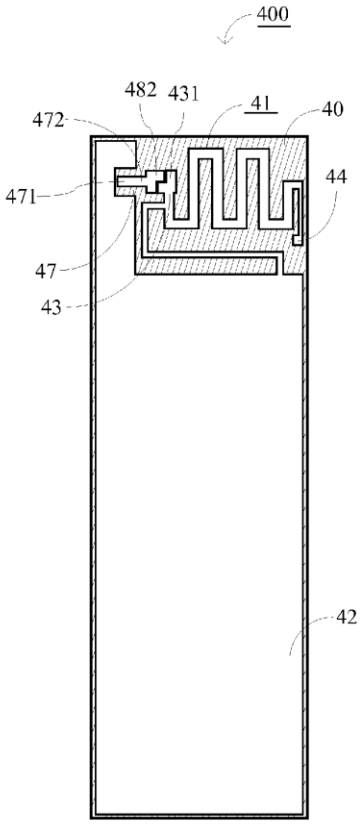

US 20140168030A1

(19) United States

(12) Patent Application Publication

Kim et al.

(10) Pub. No.: US 2014/0168030 A1

(43) Pub. Date: Jun. 19, 2014

(54) RECONFIGURABLE MULTIBAND ANTENNA

(71) Applicant: **FUTUREWEI TECHNOLOGIES, INC.**, Plano, TX (US)

(72) Inventors: **Daejoung Kim**, San Diego, CA (US); **Shing Lung Steven Yang**, San Diego, CA (US); **Wee Kian Toh**, San Diego, CA (US)

(73) Assignee: **FUTUREWEI TECHNOLOGIES, INC.**, Plano, TX (US)

(21) Appl. No.: **13/720,017**

(22) Filed: **Dec. 19, 2012**

Publication Classification

(51) **Int. Cl.**
H01Q 1/50 (2006.01)

(52) **U.S. Cl.**
CPC *H01Q 1/50* (2013.01)
USPC **343/876**

(57) **ABSTRACT**

A mobile node (MN) comprising an antenna comprising a proximate end, a distal end, and a midpoint, a first feed coupled to the antenna between the proximate end and the midpoint, a second feed coupled to the antenna between the distal end and the midpoint, a first switch configured to toggle between coupling the first feed to a main feed and coupling the second feed to the main feed, and a controller configured to control the toggling of the first switch.

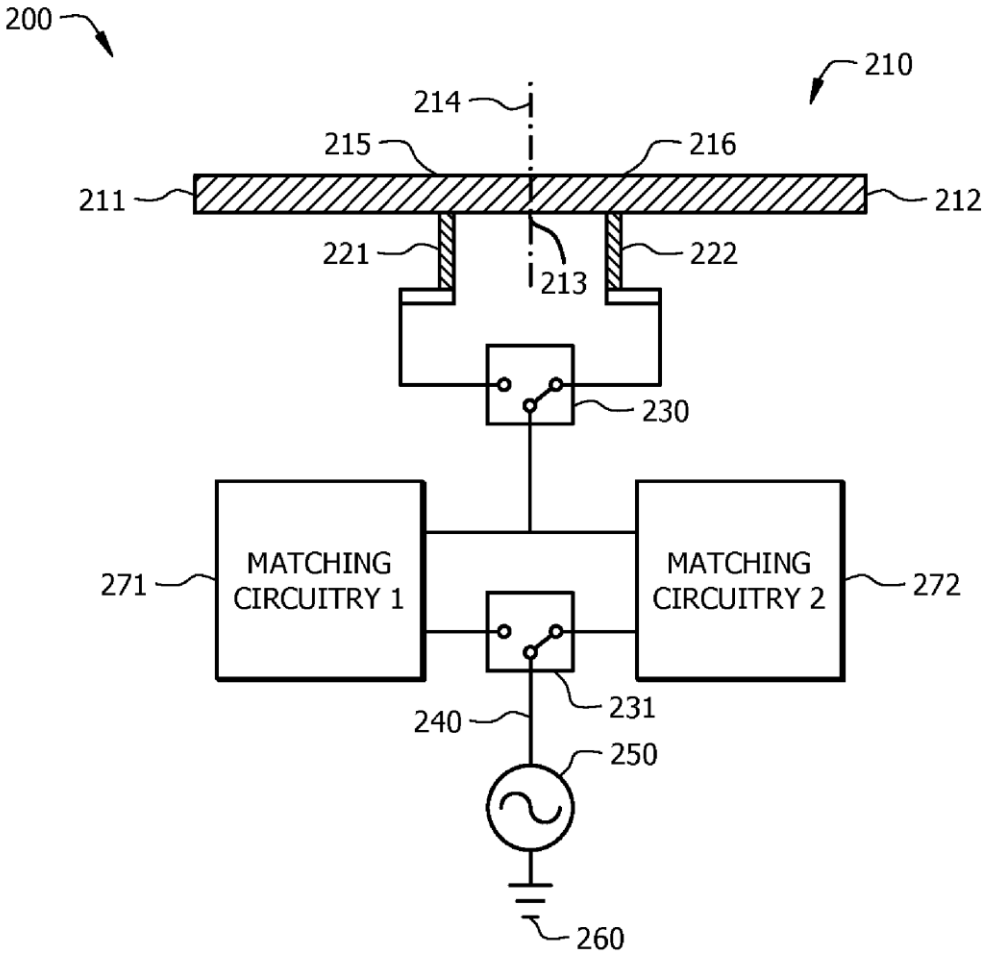

US 20140170992A1

(19) United States

(12) Patent Application Publication

Wang et al.

(10) Pub. No.: US 2014/0170992 A1

(43) Pub. Date: Jun. 19, 2014

(54) **DIVERSITY ANTENNA MODULE AND ASSOCIATED METHOD FOR A USER EQUIPMENT (UE) DEVICE**

(75) Inventors: **Dong Wang**, Waterloo (CA); **Qinjiang Rao**, Kanata (CA); **James Warden**, Ft. Worth, TX (US)

(73) Assignee: **BlackBerry Limited**, Waterloo (CA)

(21) Appl. No.: **14/232,372**

(22) PCT Filed: **Jul. 15, 2011**

(86) PCT No.: **PCT/US11/44119**

§ 371 (c)(1), (2), (4) Date: **Jan. 13, 2014**

Publication Classification

(51) **Int. Cl.**

H01Q 1/52 (2006.01)
H01Q 1/24 (2006.01)
H04B 1/38 (2006.01)

(52) **U.S. Cl.**

CPC ***H01Q 1/521*** (2013.01); ***H04B 1/38*** (2013.01); ***H01Q 1/24*** (2013.01)

USPC **455/73**; 343/893; 29/601

(57) **ABSTRACT**

A diversity antenna module comprising a first radiating element adapted to operate with a first transceiver circuit operating in at least one band and a second radiating element adapted to operate with a second transceiver circuit operating in at least one band. The first radiating element is disposed along a first side of a substrate and the second radiating element is disposed along a second side of the substrate, wherein the first and second sides are substantially parallel to each other, the first and second radiating elements being spatially dispersed from each another by a distance.

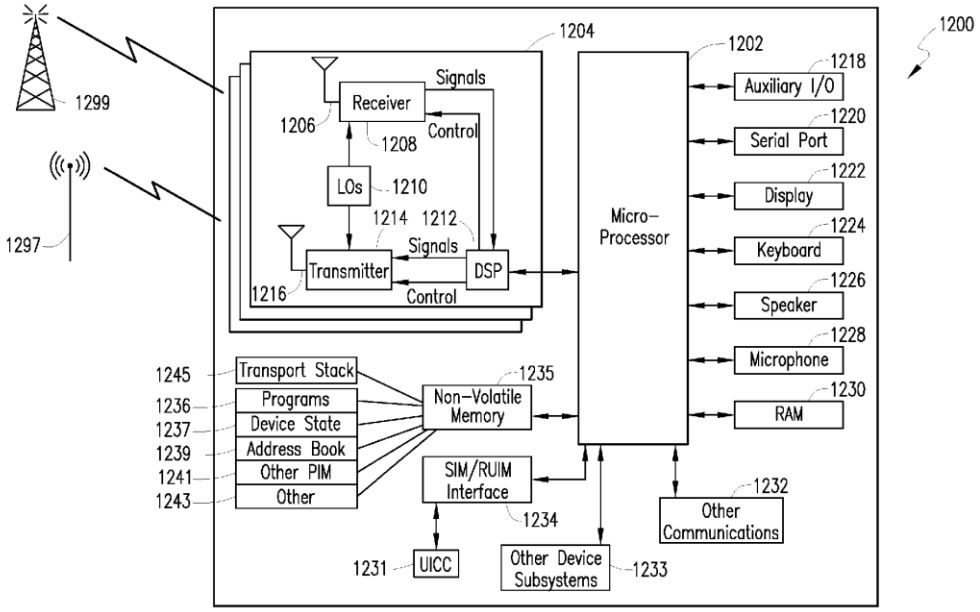

US 20140171159A1

(19) United States

(12) Patent Application Publication

ENDO et al.

(10) Pub. No.: US 2014/0171159 A1

(43) Pub. Date: Jun. 19, 2014

(54) COMMUNICATION ANTENNA UNIT AND MOBILE TERMINAL APPARATUS

(71) Applicant: **PANASONIC CORPORATION**, Osaka (JP)

(72) Inventors: **Keita ENDO**, Osaka (JP); **Teruo KATO**, Osaka (JP); **Futoshi KURIYAMA**, Osaka (JP); **Tatsuo SAWADA**, Osaka (JP); **Kenya YASUTOMI**, Fukuoka (JP); **Chizu FUKAO**, Osaka (JP); **Kotaro YOSHIDA**, Miyagi (JP); **Daigo IMANO**, Miyagi (JP)

(73) Assignee: **PANASONIC CORPORATION**, Osaka (JP)

(21) Appl. No.: **14/106,965**

(22) Filed: **Dec. 16, 2013**

(30) **Foreign Application Priority Data**

Dec. 18, 2012 (JP) 2012-276226
Dec. 18, 2012 (JP) 2012-276227

Publication Classification

(51) **Int. Cl.**
H01Q 1/22 (2006.01)
H04B 1/38 (2006.01)
H04M 1/02 (2006.01)

(52) **U.S. Cl.**
CPC ***H01Q 1/22*** (2013.01); ***H04M 1/0262*** (2013.01); ***H04B 1/3888*** (2013.01)
USPC **455/575.7**; 343/904

(57) **ABSTRACT**

In a communication antenna unit which is stored inside a casing, a flexible circuit board is supported by a support member in a bent state. A first antenna conductor pattern which configures a first communication antenna and a human body sensor are substantially formed on a flat plane section of the flexible circuit board adjacent to a curved section of the flexible circuit board. A second antenna conductor pattern which configures a second communication antenna is substantially formed on the curved section. The first antenna conductor pattern and the second antenna conductor pattern are connected to each other through an inductor coil which configures a resonant circuit portion.