US 20140111381A1

(19) **United States**

(12) **Patent Application Publication**

(10) **Pub. No.: US 2014/0111381 A1**

(43) **Pub. Date: Apr. 24, 2014**

LIN

(54) **MULTIBAND ANTENNA AND WIRELESS COMMUNICATION DEVICE EMPLOYING SAME**

(71) Applicant: **Chiun Mai Communication Systems, Inc.**, New Taipei (TW)

(72) Inventor: **YEN-HUI LIN**, New Taipei (TW)

(73) Assignee: **CHIUN MAI COMMUNICATION SYSTEMS, INC.**, New Taipei (TW)

(21) Appl. No.: **14/011,912**

(22) Filed: **Aug. 28, 2013**

(30) **Foreign Application Priority Data**

Oct. 19, 2012 (TW) 101138631

Publication Classification

(51) **Int. Cl.**
H01Q 9/04 (2006.01)

(52) **U.S. Cl.**
CPC ***H01Q 9/04*** (2013.01)
USPC ..... **343/700 MS**

(57) **ABSTRACT**

A multiband antenna includes a radiating portion, a grounding portion, a metal member, and a resonating portion. The radiating portion receives feed signals. The grounding portion is grounded. The metal member connects to the radiating portion and the grounding portion, and defines a slit that is adjacent to the radiating portion and the grounding portion. The resonating portion is positioned in an area surrounded by the radiating portion, the grounding portion, and the metal member. The resonating portion resonates with the radiating portion and the metal member to enable the multiband antenna to receive and send wireless signals at different frequencies.

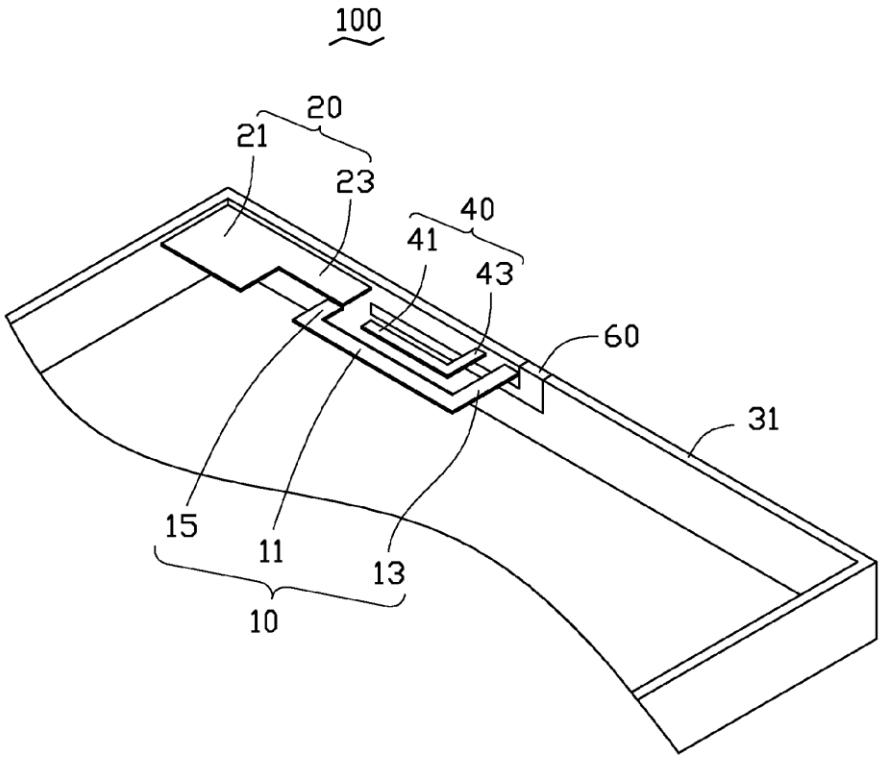

US 20140111382A1

(19) United States

(12) Patent Application Publication

(10) Pub. No.: US 2014/0111382 A1

(43) Pub. Date: Apr. 24, 2014

LEE et al.

(54) **DUAL BAND ANTENNA AND WIRELESS COMMUNICATION DEVICE EMPLOYING SAME**

(71) Applicant: **CHIUN MAI COMMUNICATION SYSTEMS, INC.**, New Taipei (TW)

(72) Inventors: **YI-CHIEH LEE**, New Taipei (TW); **YEN-HUI LIN**, New Taipei (TW)

(73) Assignee: **CHIUN MAI COMMUNICATION SYSTEMS, INC.**, New Taipei (TW)

(21) Appl. No.: **14/014,574**

(22) Filed: **Aug. 30, 2013**

(30) **Foreign Application Priority Data**

Oct. 19, 2012 (TW) 101138831

Publication Classification

(51) **Int. Cl.**
H01Q 5/00 (2006.01)

(52) **U.S. Cl.**
CPC ***H01Q 5/0093*** (2013.01)
USPC ..... **343/700 MS**

(57) **ABSTRACT**

A dual band antenna includes a first radiating portion, a second radiating portion, and a resonating portion. The first radiating portion includes a first feeding arm that feeds first signals at a first frequency band. The second radiating portion is positioned spaced apart from the first radiating portion. The second radiating portion includes a second feeding arm that feeds second signals at a second frequency band. The resonating portion is connected between the first radiating portion and the second radiating portion. The resonating portion resonates with the first and second radiating portions to generate two different frequency bands, so that the dual band antenna receives and sends wireless signals at the first and second frequency bands.

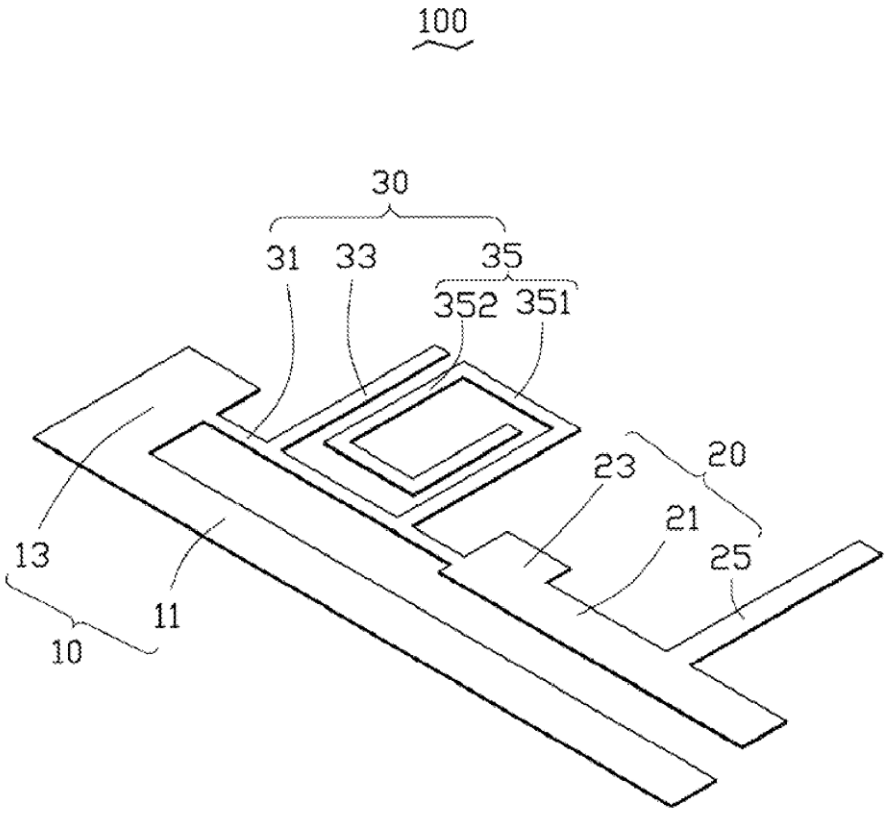

US 20140111383A1

(19) **United States**

(12) **Patent Application Publication**

SU et al.

(10) **Pub. No.: US 2014/0111383 A1**

(43) **Pub. Date: Apr. 24, 2014**

(54) **BROADBAND ANTENNA AND WIRELESS COMMUNICATION DEVICE EMPOLYING SAME**

(71) Applicant: **Chiun Mai Communication Systems, Inc.**, New Taipei (TW)

(72) Inventors: **Wei-Cheng SU**, New Taipei (TW); **Yen-Hui LIN**, New Taipei (TW)

(73) Assignee: **Chiun Mai Communication Systems, Inc.**, New Taipei (TW)

(21) Appl. No.: **14/014,586**

(22) Filed: **Aug. 30, 2013**

(30) **Foreign Application Priority Data**

Oct. 24, 2012 (TW) 101139311

Publication Classification

(51) **Int. Cl.**
H01Q 5/01 (2006.01)

(52) **U.S. Cl.**
CPC ***H01Q 5/01*** (2013.01)
USPC ..... **343/700 MS**

(57) **ABSTRACT**

A broadband antenna for wireless communication device is disclosed. The broadband antenna includes a main radiator, a grounding unit, a feeding unit, and a resonating unit. The main radiator includes a main radiating portion, a first radiating arm extending from the main radiating portion, and a second radiating arm extending from the main radiating arm, the first radiating arm forms a first current path to generate a first high frequency mode; the second radiating arm forms a second current path to generate a second high frequency mode. The resonating unit is connected to the grounding unit, the resonating unit surrounds and is positioned separate from the second radiating arm, the resonating unit resonates with the main radiator to generate two different low frequency bands corresponding to two coupling currents.

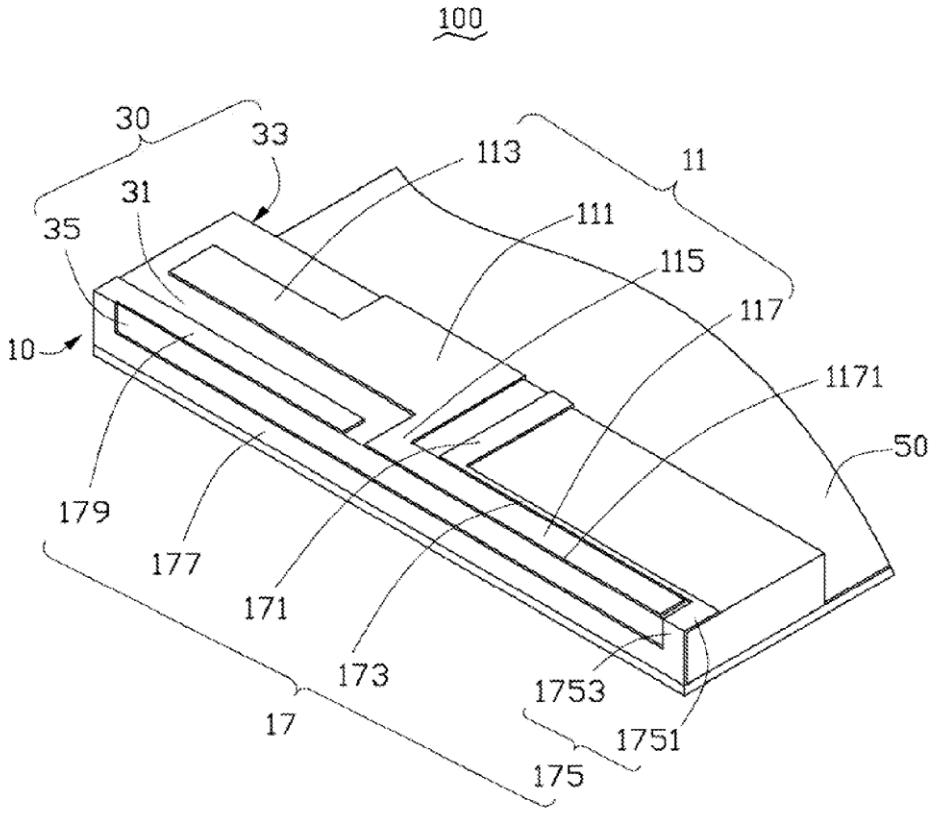

US 20140111384A1

(19) **United States**

(12) **Patent Application Publication**

SU et al.

(10) **Pub. No.: US 2014/0111384 A1**

(43) **Pub. Date: Apr. 24, 2014**

(54) **WIRELESS COMMUNICATION APPARATUS AND ANTENNA SYSTEM THEREOF**

(71) Applicant: **ASUSTeK COMPUTER INC.**, Taipei (TW)

(72) Inventors: **Saou-Wen SU**, TAIPEI (TW); **Fang-Hsien CHU**, TAIPEI (TW); **Chih-Chung LIN**, TAIPEI (TW)

(73) Assignee: **ASUSTeK COMPUTER INC.**, Taipei (TW)

(21) Appl. No.: **14/029,825**

(22) Filed: **Sep. 18, 2013**

(30) **Foreign Application Priority Data**

Oct. 18, 2012 (TW) 101138432

Publication Classification

(51) **Int. Cl.**
H01Q 1/36 (2006.01)

(52) **U.S. Cl.**
CPC ***H01Q 1/36*** (2013.01)
USPC ..... **343/700 MS**

(57) **ABSTRACT**

A wireless communication apparatus and an antenna system therein are provided. The antenna system includes a grounding portion and an antenna body. The grounding portion includes a ground plane and a conducting element. The conducting element is perpendicular to the ground plane and is connected to the ground plane to provide a first current path. The antenna body includes a main radiating portion and a short circuit portion. The main radiating portion is parallel to the ground plane and provides a second current path. An end of the main radiating portion is electrically connected to a signal source. The short circuit portion is electrically connected between the main radiating portion and the conducting element and provides a third current path. The directions of the first current path, the second current path and the third current path are perpendicular mutually.

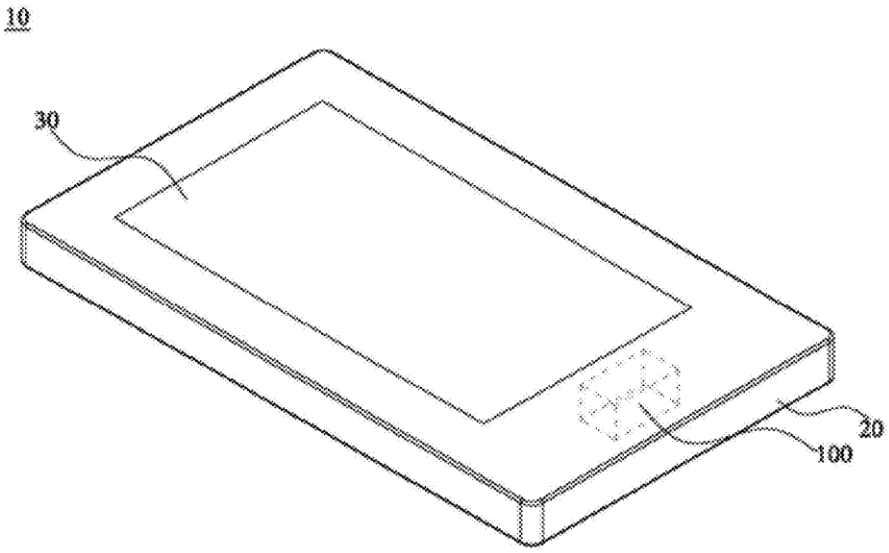

US 20140111386A1

(19) **United States**

(12) **Patent Application Publication**

(10) **Pub. No.: US 2014/0111386 A1**

(43) **Pub. Date: Apr. 24, 2014**

Xu

(54) **MULTIMODE BROADBAND ANTENNA MODULE AND WIRELESS TERMINAL**

(71) Applicant: **Huawei Device Co., Ltd.**, Shenzhen (CN)

(72) Inventor: **Huiliang Xu**, Shenzhen (CN)

(73) Assignee: **Huawei Device Co., Ltd.**, Shenzhen (CN)

(21) Appl. No.: **14/145,441**

(22) Filed: **Dec. 31, 2013**

Related U.S. Application Data

(63) Continuation of application No. PCT/CN2012/083096, filed on Oct. 17, 2012.

Publication Classification

(51) **Int. Cl.**
H01Q 5/01 (2006.01)

(52) **U.S. Cl.**
CPC ***H01Q 5/01*** (2013.01)
USPC ..... **343/700 MS**

(57) **ABSTRACT**

A multimode broadband antenna module and a wireless terminal are provided. The multimode broadband antenna module includes a printed circuit board and an antenna body, where the antenna body includes a first radiator and a second radiator that are electrically connected to the printed circuit board, where the first radiator includes a connection portion, a low frequency portion, and a high frequency portion, the second radiator includes a grounding portion, a low frequency portion, and a high frequency portion, and a first predetermined distance exists between the low frequency portion of the first radiator and the low frequency portion of the second radiator, and a second predetermined distance exists between the high frequency portion of the first radiator and the high frequency portion of the second radiator, so as to form a coupling capacitance effect between the first radiator and the second radiator.

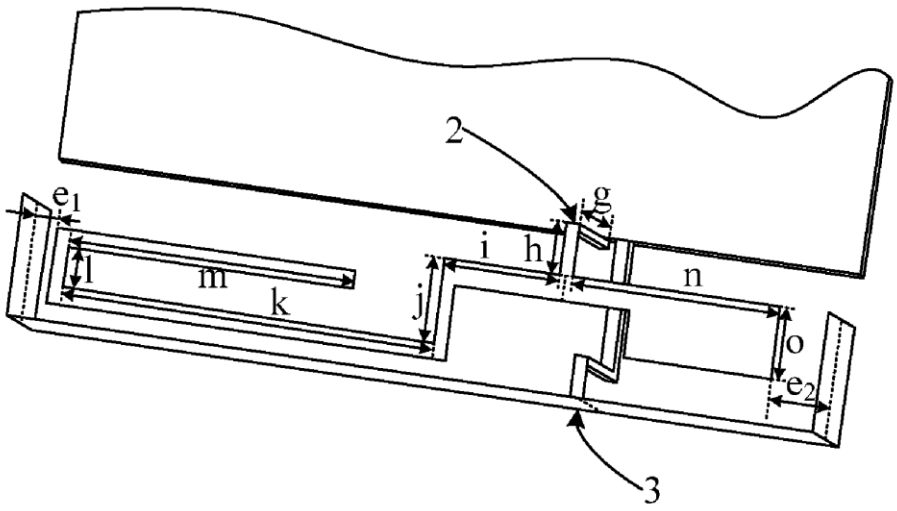

US 20140111388A1

(19) **United States**

(12) **Patent Application Publication**

Di Nallo et al.

(10) **Pub. No.: US 2014/0111388 A1**

(43) **Pub. Date: Apr. 24, 2014**

(54) **ANTENNA SURROUNDED BY METAL HOUSING**

(71) Applicants: **Carlo Di Nallo**, Plantation, FL (US); **Simone Paulotto**, Rockville, MD (US)

(72) Inventors: **Carlo Di Nallo**, Plantation, FL (US); **Simone Paulotto**, Rockville, MD (US)

(21) Appl. No.: **13/841,744**

(22) Filed: **Mar. 15, 2013**

Related U.S. Application Data

(60) Provisional application No. 61/621,910, filed on Apr. 9, 2012, provisional application No. 61/767,773, filed on Feb. 21, 2013.

Publication Classification

(51) **Int. Cl.**
H01Q 13/10 (2006.01)

(52) **U.S. Cl.**
CPC ***H01Q 13/106*** (2013.01)
USPC **343/702**; 343/767

(57) **ABSTRACT**

An antenna system includes a metal housing including a first edge and a second edge that meet at a corner and a slot located proximate the second edge that extends from the first edge parallel to the second edge defining a strip and an antenna located behind and in close proximity to the strip. The antenna is coupled to the strip. A parasitic element is located proximate the antenna and the strip includes a ground coupling that crosses the slot in spaced relation thereto. The parasitic element assists in establishing second and third higher frequency modes of the antenna system.

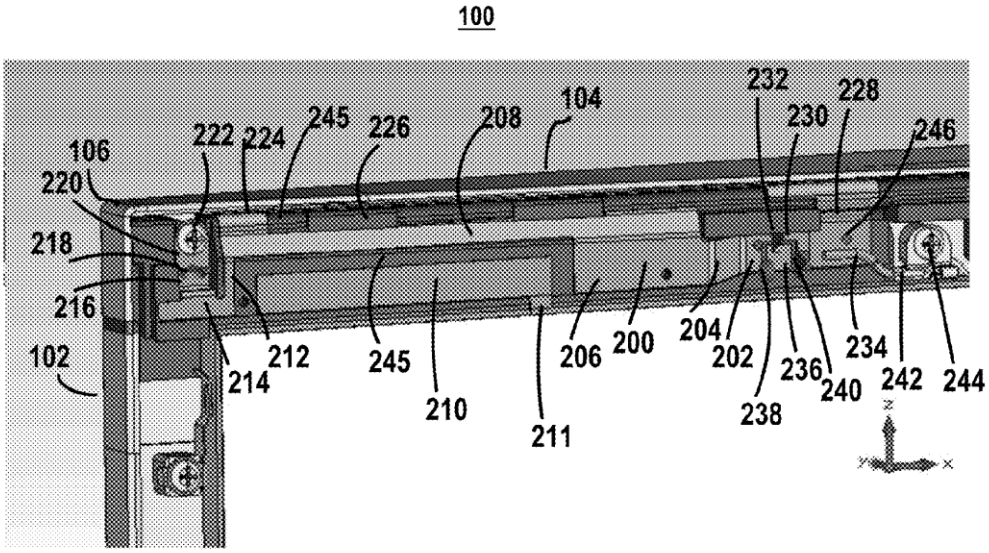

US 20140111393A1

(19) **United States**

(12) **Patent Application Publication**

(10) **Pub. No.: US 2014/0111393 A1**

(43) **Pub. Date: Apr. 24, 2014**

LO HINE TONG et al.

(54) **COMPACT SLOT ANTENNA**

(71) Applicant: **THOMSON LICENSING**, Issy de Moulineaux (FR)

(72) Inventors: **Dominique LO HINE TONG**, Rennes (FR); **Kevin Nadaud**, Reze (FR); **Philippe Minard**, Saint Medard Sur Ille (FR); **Francois Baron**, Thorigne-Fouillard (FR)

(73) Assignee: **THOMSON LICENSING**, Issy de Moulineaux (FR)

(21) Appl. No.: **14/059,701**

(22) Filed: **Oct. 22, 2013**

(30) **Foreign Application Priority Data**

Oct. 23, 2012 (FR) 1260064

Publication Classification

(51) **Int. Cl.**
H01Q 13/10 (2006.01)

(52) **U.S. Cl.**
CPC ***H01Q 13/106*** (2013.01)
USPC **343/770**

(57) **ABSTRACT**

The present invention relates to a compact slot antenna formed, in a multilayer substrate comprising, in order, at least one first conductive layer, a first dielectric layer, a second conductive layer, a second dielectric layer and a third conductive layer, of a first slot-line realised in the second conductive layer, said first slot-line being connected to the supply of the antenna, of a second and a third slot-lines realised respectively in the first and in the third conductive layers, the second and third slot-lines each being delimited by two conductive strips of which a first extremity, supply side, is interconnected by a via passing through a window realised in the second conductive layer and a second extremity connected to the second conductive layer, both conductive strips on the side of the second extremity being, either in open circuit, or in short circuit, the electrical length of the first, second and third slot-lines being a function of the wavelength at the operating frequency of the antenna.

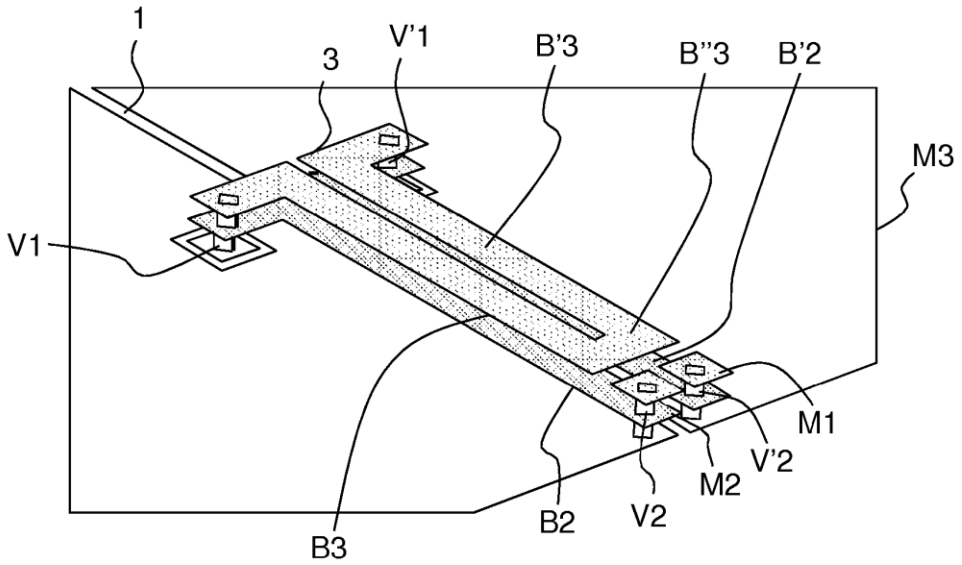

US 20140111399A1

(19) **United States**

(12) **Patent Application Publication**

Lin et al.

(10) **Pub. No.: US 2014/0111399 A1**

(43) **Pub. Date: Apr. 24, 2014**

(54) **DIRECTIONAL ANTENNA**

(71) Applicants: **Ting-Yi Lin**, Taipei City (TW); **Tsung-Hsun Hsieh**, Taipei City (TW); **Chi-Hsien Chiu**, Taipei City (TW); **Yu-Chia Chang**, Taipei City (TW)

(72) Inventors: **Ting-Yi Lin**, Taipei City (TW); **Tsung-Hsun Hsieh**, Taipei City (TW); **Chi-Hsien Chiu**, Taipei City (TW); **Yu-Chia Chang**, Taipei City (TW)

(73) Assignee: **ASUSTEK COMPUTER INC.**, Taipei City (TW)

(21) Appl. No.: **14/048,042**

(22) Filed: **Oct. 8, 2013**

Related U.S. Application Data

(60) Provisional application No. 61/715,307, filed on Oct. 18, 2012.

(30) **Foreign Application Priority Data**

Aug. 2, 2013 (CN) 201310334918.5

Publication Classification

(51) **Int. Cl.**
H01Q 1/36 (2006.01)

(52) **U.S. Cl.**
CPC ***H01Q 1/36*** (2013.01)
USPC **343/843**

(57) **ABSTRACT**

A directional antenna including a ground plane, a feeding element and a radiating element is provided. The feeding element is adjacent to the ground plane and includes a feeding point. A coupling gap is formed between the radiating element and the feeding element, and the radiating element includes a coupling point. Both the coupling point of the radiating element and the feeding point of the feeding element are at the perpendicular line of a ground plane. Further, a distance between the coupling point and an open end of the radiating element is smaller than 0.16λ of a resonant frequency of the directional antenna.

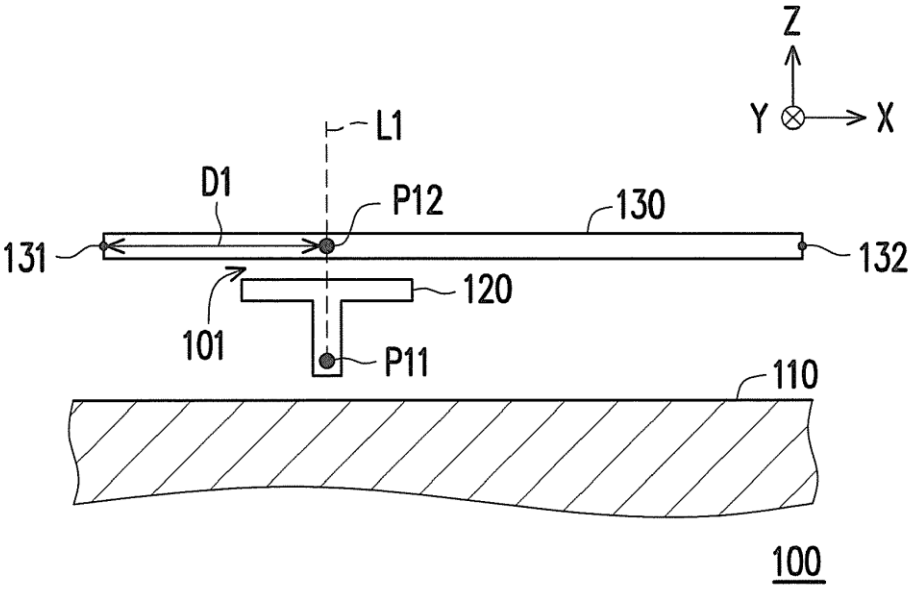

US 20140111684A1

(19) **United States**

(12) **Patent Application Publication**

Corbin et al.

(10) **Pub. No.: US 2014/0111684 A1**

(43) **Pub. Date: Apr. 24, 2014**

(54) **ANTENNA STRUCTURES AND ELECTRICAL COMPONENTS WITH GROUNDING**

(71) Applicant: **APPLE INC.**, Cupertino, CA (US)

(72) Inventors: **Sean S. Corbin**, San Jose, CA (US); **Taylor H. Gilbert**, Sunnyvale, CA (US); **Rodney A. Gomez Angulo**, Sunnyvale, CA (US); **Yi Jiang**, Sunnyvale, CA (US); **Conor P. Lenahan**, Cupertino, CA (US); **Qingxiang Li**, Mountain View, CA (US); **Stephen R. McClure**, San Francisco, CA (US); **Robert W. Schlub**, Cupertino, CA (US); **Salih Yarga**, Sunnyvale, CA (US); **Jiang Zhu**, Sunnyvale, CA (US)

(73) Assignee: **Apple, Inc.**, Cupertino, CA (US)

(21) Appl. No.: **13/655,215**

(22) Filed: **Oct. 18, 2012**

Publication Classification

(51) **Int. Cl.**

H01Q 1/24	(2006.01)
H04R 1/02	(2006.01)
H04N 5/225	(2006.01)
H05K 1/14	(2006.01)

(52) **U.S. Cl.**

USPC **348/374**; 343/702; 361/749; 381/91; 348/E05.026

(57) **ABSTRACT**

An electronic device may have a conductive housing with an antenna window. Antenna structures may be mounted adjacent to the antenna window. The antenna structures may have a dielectric carrier. Patterned metal antenna traces may be formed on the surface of the dielectric carrier. A proximity sensor may be formed from a flexible printed circuit mounted on the dielectric carrier. The flexible printed circuit may have a tail that contains a transmission line for feeding the antenna structures. The transmission line may include a positive signal conductor that is maintained at a desired distance from the conductive housing using a polymer sheet. A portion of the antenna structures may protrude between a microphone and a camera module. Plastic camera module housing structures may have an inner surface coated with a shielding metal. A U-shaped conductive fabric layer may be used as a grounding structure.

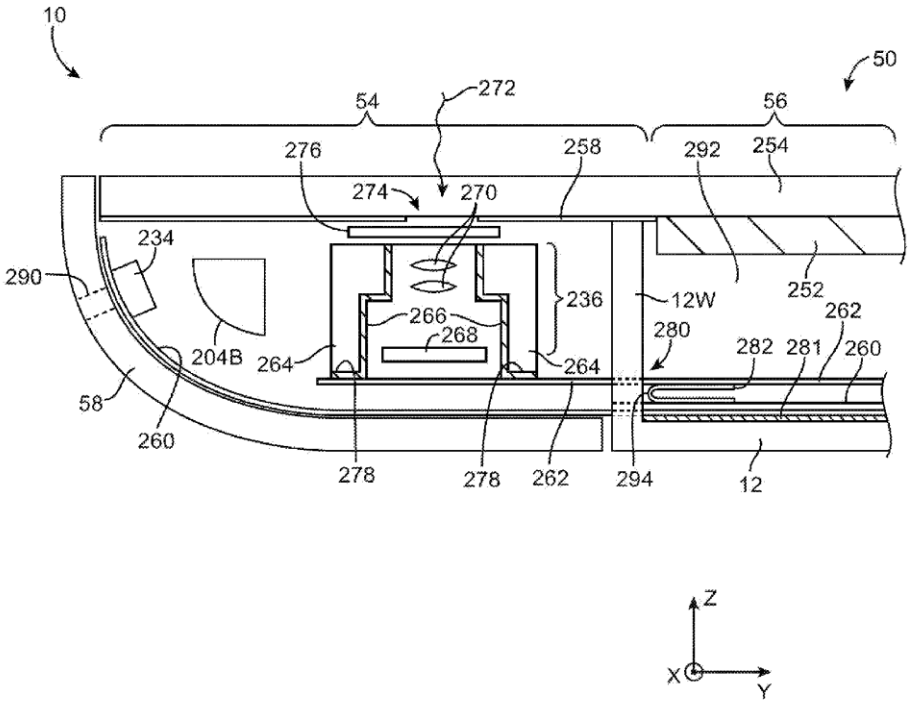

US 20140112422A1

(19) **United States**

(12) **Patent Application Publication**

Zhang et al.

(10) **Pub. No.: US 2014/0112422 A1**

(43) **Pub. Date: Apr. 24, 2014**

(54) **METHOD AND APPARATUS FOR IMPROVING COMMUNICATION RATE**

(71) Applicant: **Huawei Device Co., Ltd.**, Shenzhen (CN)

(72) Inventors: **Heping Zhang**, Shenzhen (CN); **Zhenghao Li**, Shenzhen (CN); **Zhongying Long**, Shenzhen (CN); **Dingjie Wang**, Shenzhen (CN); **Zhaoliang Yang**, Shenzhen (CN); **Dongxing Tu**, Shenzhen (CN)

(73) Assignee: **Huawei Device Co., Ltd.**, Shenzhen (CN)

(21) Appl. No.: **14/145,331**

(22) Filed: **Dec. 31, 2013**

Related U.S. Application Data

(63) Continuation of application No. PCT/CN2012/087959, filed on Dec. 31, 2012.

(30) **Foreign Application Priority Data**

Apr. 28, 2012 (CN) 201210131952.8

Publication Classification

(51) **Int. Cl.**
H04B 7/04 (2006.01)

(52) **U.S. Cl.**
CPC ***H04B 7/0413*** (2013.01); ***H04B 7/0404*** (2013.01)
USPC **375/349**

(57) **ABSTRACT**

A method and an apparatus are provided for improving a communication rate, which are used in a terminal working in a multiple-input multiple-output (MIMO) state. The method includes: obtaining strength of a first signal received in a first path connected to a first antenna and strength of a second signal received in a second path connected to a second antenna; and adjusting the first path or/and the second path according to a difference between the strength of the first signal and the strength of the second signal, so as to reduce an unbalance degree between the first path and the second path, thereby improving the communication rate. By adopting the present invention, improvement of a rate of an antenna may be achieved by adjusting a balance between the first and second paths.

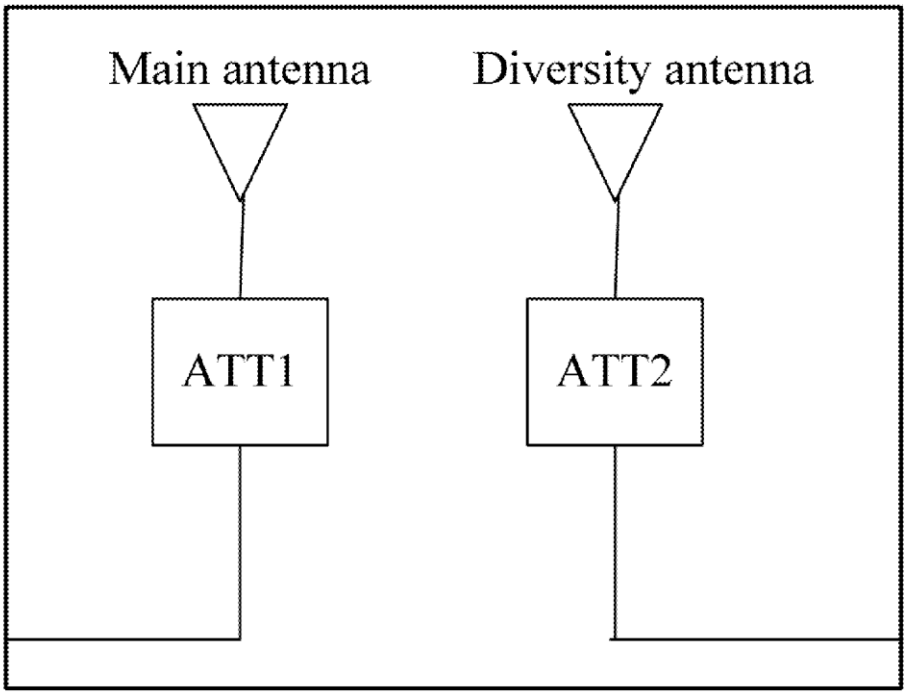

US 20140112511A1

(19) **United States**

(12) **Patent Application Publication**

Corbin et al.

(10) **Pub. No.: US 2014/0112511 A1**

(43) **Pub. Date: Apr. 24, 2014**

(54) **ELECTRONIC DEVICE WITH CONDUCTIVE FABRIC SHIELD WALL**

(71) Applicant: **APPLE INC.**, Cupertino, CA (US)

(72) Inventors: **Sean S. Corbin**, San Jose, CA (US); **Taylor H. Gilbert**, Sunnyvale, CA (US); **Rodney A. Gomez Angulo**, Sunnyvale, CA (US); **Qingxiang Li**, Mountain View, CA (US); **Stephen R. McClure**, San Francisco, CA (US); **Julio C. Quintero**, Los Gatos, CA (US); **Miroslav Samardzija**, Mountain View, CA (US); **Robert W. Schlub**, Cupertino, CA (US); **Jiang Zhu**, Sunnyvale, CA (US)

(73) Assignee: **Apple Inc.**, Cupertino, CA (US)

(21) Appl. No.: **13/655,315**

(22) Filed: **Oct. 18, 2012**

Publication Classification

(51) **Int. Cl.**

H01Q 1/52	(2006.01)
H04R 1/02	(2006.01)
H05K 5/00	(2006.01)
H01Q 1/24	(2006.01)
H05K 7/00	(2006.01)

(52) **U.S. Cl.**

USPC **381/333**; 343/702; 361/748; 361/753

(57) **ABSTRACT**

An electronic device may have a housing such as a metal housing. A display may be mounted in the metal housing. Antenna structures may be mounted in the housing under an inactive peripheral portion of the display. Integrated circuits and other electrical components may be mounted in the housing under an active central portion of the display. Shielding structures may be configured to form a wall that extends between the display and the metal housing. The shielding structures may include a sheet of conductive fabric that is shorted to the metal housing and metal chassis structures in the display. The shielding structures may also include a tube of conductive fabric that is capacitively coupled to ground traces in a touch sensor panel. The conductive fabric tube and the sheet of conductive fabric may be shorted to each other using conductive adhesive.

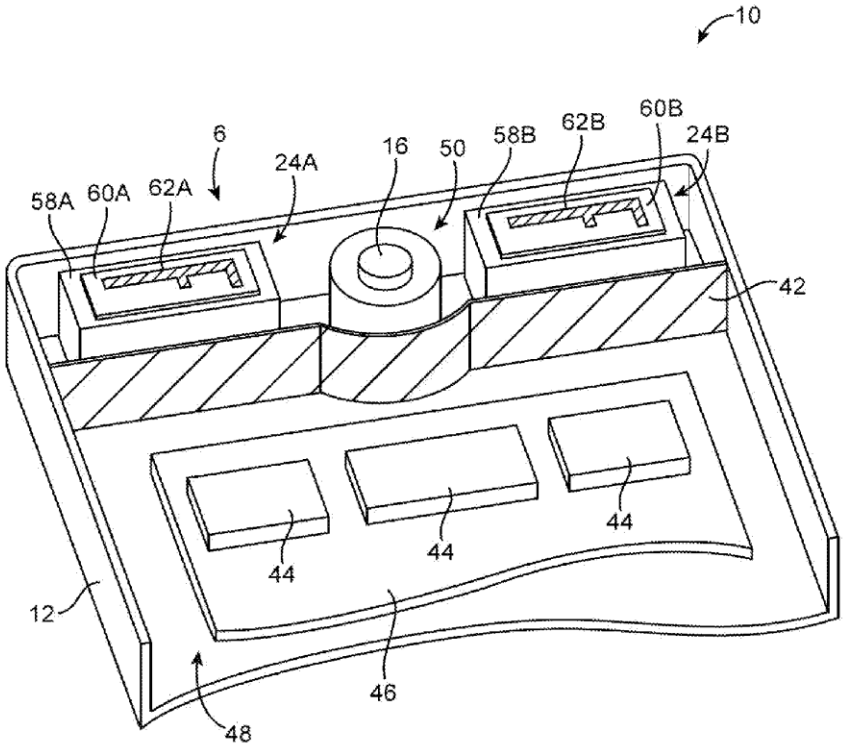

US 20140112523A1

(19) **United States**

(12) **Patent Application Publication**

Mai et al.

(10) **Pub. No.: US 2014/0112523 A1**

(43) **Pub. Date: Apr. 24, 2014**

(54) **SPEAKER MODULE AND ELECTRONIC APPARATUS THEREOF**

(71) Applicant: **Wistron NeWeb Corporation**, Hsinchu (TW)

(72) Inventors: **Ching-Chia Mai**, Kaohsiung City (TW); **Kuan-Hsueh Tseng**, Hsinchu (TW); **Cheng-Han Lee**, Kaohsiung City (TW); **Chih-Ming Wang**, Hsinchu (TW)

(73) Assignee: **Wistron NeWeb Corporation**, Hsinchu (TW)

(21) Appl. No.: **14/148,736**

(22) Filed: **Jan. 7, 2014**

Related U.S. Application Data

(63) Continuation-in-part of application No. 13/361,961, filed on Jan. 31, 2012, now Pat. No. 8,654,968.

(30) **Foreign Application Priority Data**

Sep. 21, 2011 (TW) 100217682

Publication Classification

(51) **Int. Cl.**
H04R 1/02 (2006.01)

(52) **U.S. Cl.**
CPC ***H04R 1/028*** (2013.01)
USPC **381/388**

(57) **ABSTRACT**

An electronic apparatus includes an antenna, an antenna signal transmitting member, and an electronic device having an attachment part, and a speaker module installed in the attachment part and including a containing casing, a speaker device, and an audio signal transmitting member. The containing casing has a first hole formed thereon. A second hole is formed on the attachment part. The audio signal transmitting member is electrically connected to the speaker device for electrically connecting to the electronic device, so as to establish audio signal transmission between the speaker device and the electronic device. The antenna is formed integrally with the attachment part along a contour of the attachment part. The antenna signal transmitting member is formed on the attachment part and coupled to the electronic device. The antenna is coupled to the antenna signal transmitting member for establishing antenna signal transmission between the antenna and the electronic device.

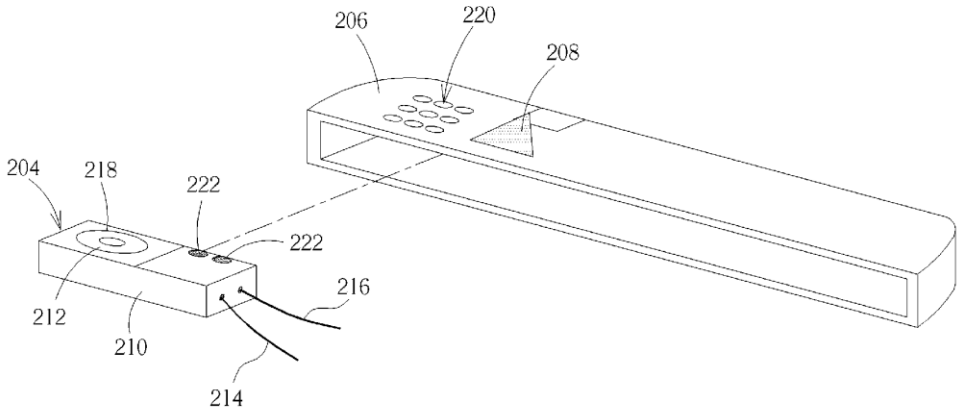

US 20140113693A1

(19) **United States**

(12) **Patent Application Publication**

Wei et al.

(10) **Pub. No.: US 2014/0113693 A1**

(43) **Pub. Date: Apr. 24, 2014**

(54) **MOBILE COMMUNICATION DEVICE**

(71) Applicant: **ACER INCORPORATED**, New Taipei City (TW)

(72) Inventors: **Wan-Chu Wei**, New Taipei City (TW); **Pei-Yuan Chiu**, New Taipei City (TW); **Chih-Hua Chang**, New Taipei City (TW)

(73) Assignee: **Acer Incorporated**, New Taipei City (TW)

(21) Appl. No.: **13/887,374**

(22) Filed: **May 6, 2013**

(30) **Foreign Application Priority Data**

Oct. 19, 2012 (TW) 101138734

Publication Classification

(51) **Int. Cl.**
H04B 1/38 (2006.01)

(52) **U.S. Cl.**
CPC ***H04B 1/3833*** (2013.01)
USPC **455/575.7**

(57) **ABSTRACT**

A mobile communication device includes a substrate, a metal frame, a feeding portion, and a parasitic portion. The substrate includes a ground plane and a non-ground area. The metal frame surrounds the substrate and includes a plurality of gaps to form a first frame element and a second frame element separated from each other. The first frame element is electrically connected to the ground plane. The feeding portion and the parasitic portion are located in the non-ground area. A first end of the feeding portion is configured to receive a feeding signal, and a second end of the feeding portion is an open end. The parasitic portion is electrically connected to the second frame element and the ground plane. The feeding portion, the second frame element, and the parasitic portion of the mobile communication device constitute a loop antenna.

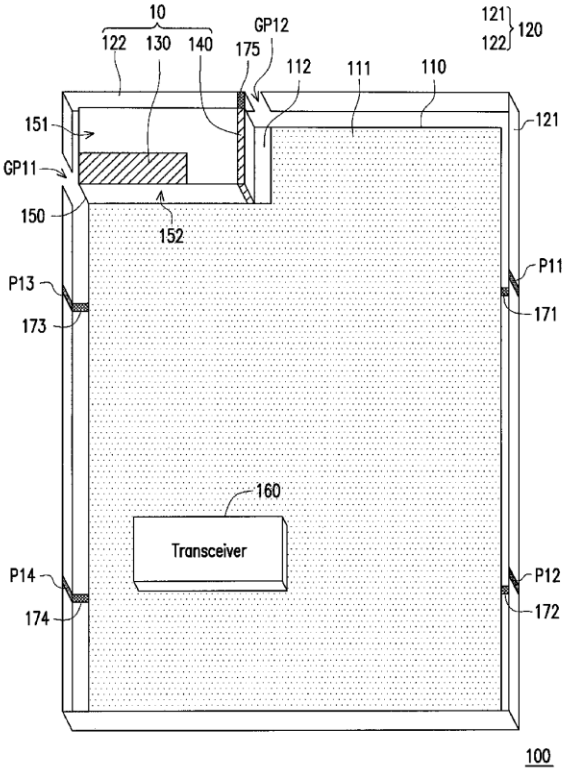

US 20140118190A1

(19) **United States**

(12) **Patent Application Publication**

Mendolia

(10) **Pub. No.: US 2014/0118190 A1**

(43) **Pub. Date: May 1, 2014**

(54) **METHOD AND APPARATUS FOR TUNING A COMMUNICATION DEVICE**

(71) Applicant: **BlackBerry Limited**, Waterloo (CA)

(72) Inventor: **Gregory Mendolia**, Hollis, NH (US)

(73) Assignee: **BlackBerry Limited**, Waterloo (CA)

(21) Appl. No.: **14/149,259**

(22) Filed: **Jan. 7, 2014**

Related U.S. Application Data

(63) Continuation of application No. 13/035,417, filed on Feb. 25, 2011, now Pat. No. 8,655,286.

Publication Classification

(51) **Int. Cl.**
H04B 7/00 (2006.01)

(52) **U.S. Cl.**
CPC ***H04B 7/00*** (2013.01)
USPC **342/367**

(57) **ABSTRACT**

A system that incorporates teachings of the present disclosure may include, for example, a non-transitory computer-readable storage medium including computer instructions to obtain at least one operational parameter associated with a communication device and to adjust a steerable antenna of the communication device when the communication device does not satisfy an impedance threshold, where the satisfying of the impedance threshold is determined based on the at least one operational parameter. Additional embodiments are disclosed.

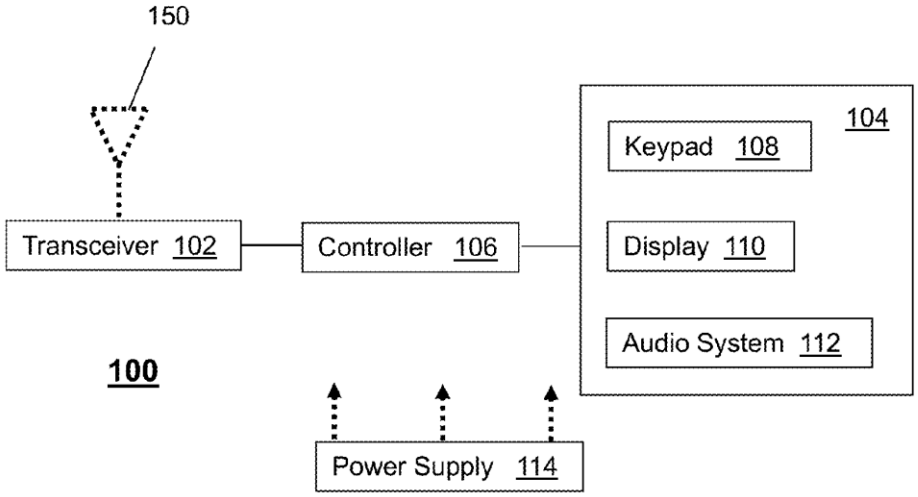

US 20140118194A1

(19) **United States**

(12) **Patent Application Publication**

Gavilan et al.

(10) **Pub. No.: US 2014/0118194 A1**

(43) **Pub. Date: May 1, 2014**

(54) **MULTI-BAND ANTENNA AND AN ELECTRONIC DEVICE INCLUDING THE SAME**

(71) Applicant: **NVIDIA CORPORATION**, Santa Clara, CA (US)

(72) Inventors: **Joselito Gavilan**, Santa Clara, CA (US); **Warren Lee**, Santa Clara, CA (US)

(73) Assignee: **NVIDIA CORPORATION**, Santa Clara, CA (US)

(21) Appl. No.: **13/691,222**

(22) Filed: **Nov. 30, 2012**

Related U.S. Application Data

(60) Provisional application No. 61/721,358, filed on Nov. 1, 2012.

Publication Classification

(51) **Int. Cl.**
H01Q 5/00 (2006.01)

(52) **U.S. Cl.**
CPC ***H01Q 5/0003*** (2013.01)
USPC ..... **343/700 MS**

(57) **ABSTRACT**

Provided is a multi-band antenna. The multi-band antenna, as provided in one embodiment, includes a first resonant portion having a first length defined by an outer perimeter of a conductive segment and operable to effect an antenna for communication in a first band of frequencies. The multi-band antenna, in this aspect, further includes a second resonant portion having a second length defined by an inner perimeter of the conductive segment and operable to resonate capacitively for communication in a second different band of frequencies.

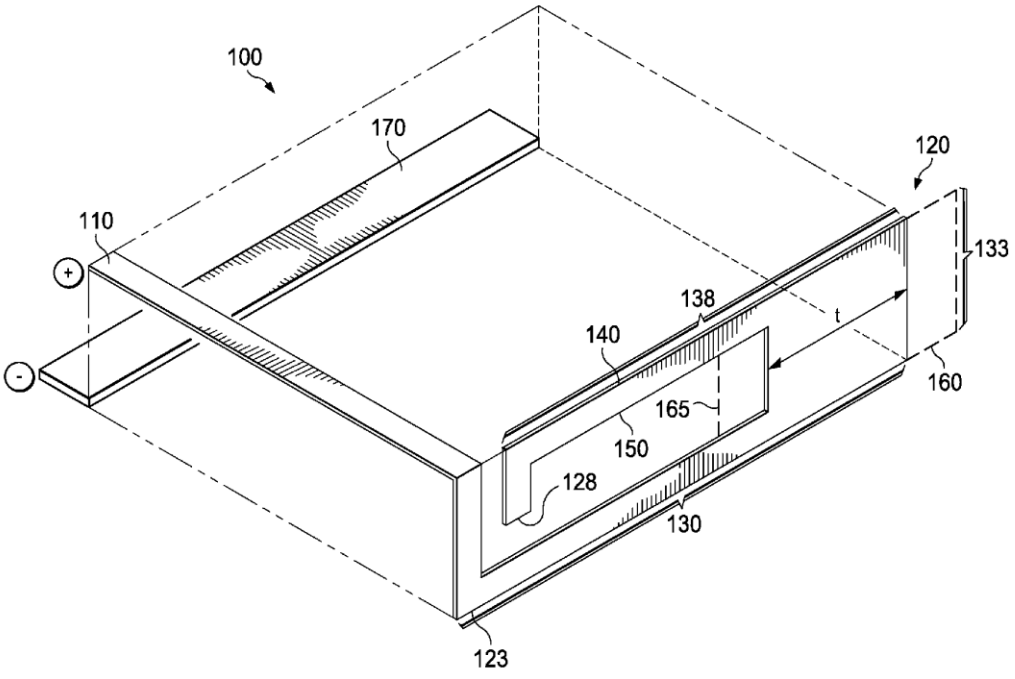

US 20140118195A1

(19) **United States**

(12) **Patent Application Publication**

CHEN et al.

(10) **Pub. No.: US 2014/0118195 A1**

(43) **Pub. Date: May 1, 2014**

(54) **ANTENNA STRUCTURE**

(71) Applicant: **CHIUN MAI COMMUNICATION SYSTEMS, INC.**, New Taipei (TW)

(72) Inventors: **YI-TING CHEN**, New Taipei (TW); **CHO-KANG HSU**, New Taipei (TW)

(73) Assignee: **CHIUN MAI COMMUNICATION SYSTEMS, INC.**, New Taipei (TW)

(21) Appl. No.: **14/011,925**

(22) Filed: **Aug. 28, 2013**

(30) **Foreign Application Priority Data**

Oct. 26, 2012 (TW) 101139597

Publication Classification

(51) **Int. Cl.**
H01Q 5/00 (2006.01)

(52) **U.S. Cl.**
CPC ***H01Q 5/001*** (2013.01)
USPC ..... **343/700 MS**

(57) **ABSTRACT**

An antenna structure includes a feed end, a ground end, a first radiator, a second radiator, and a third radiator. Both of the first radiator and the second radiator are connected to the feed end. The second radiator includes a first connection section and a second connection section. The third radiator is connected to the ground end, and includes a first coupling section separated from the first connection section and a second coupling section separated from the second connection section. A first gap is defined between the first coupling section and the first connection section; and a second gap is defined between the second coupling section and the second connection section.

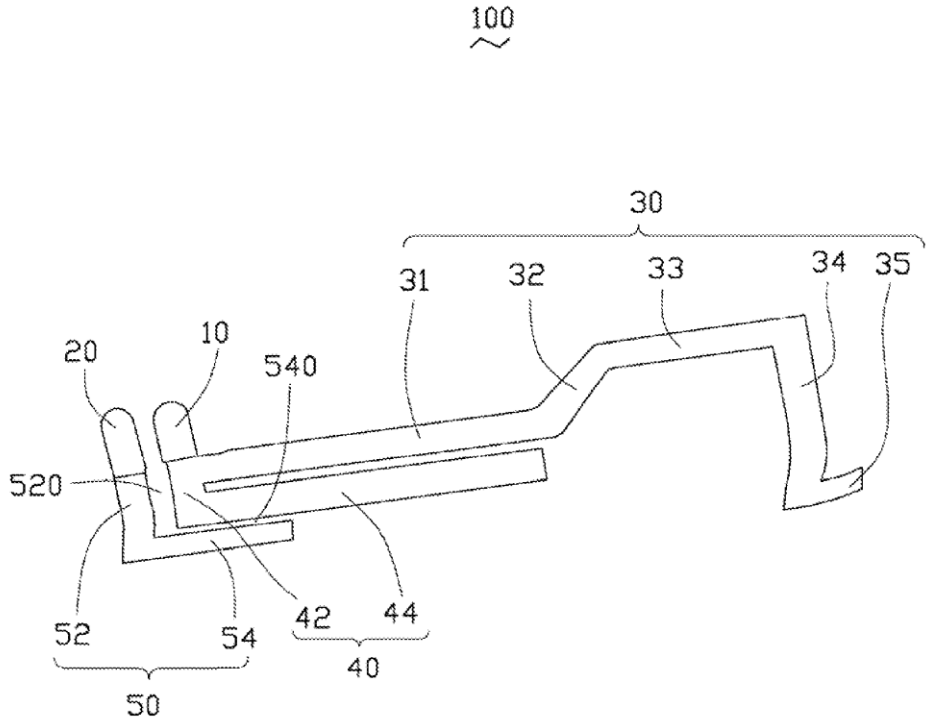

US 20140118202A1

(19) **United States**

(12) **Patent Application Publication**

LIN et al.

(10) **Pub. No.: US 2014/0118202 A1**

(43) **Pub. Date: May 1, 2014**

(54) **SMART ELECTRIC METER**

(71) Applicant: **Wistron NeWeb Corp.**, Hsinchu (TW)

(72) Inventors: **Chia-Hong LIN**, Hsinchu (TW); **Chang-Hsiu HUANG**, Hsinchu (TW); **I-Shan CHEN**, Hsinchu (TW); **Guo-Cheng TSAI**, Hsinchu (TW); **Chun-Chia KUO**, Hsinchu (TW)

(73) Assignee: **Wistron NeWeb Corp.**, Hsinchu (TW)

(21) Appl. No.: **13/966,856**

(22) Filed: **Aug. 14, 2013**

(30) **Foreign Application Priority Data**

Nov. 1, 2012 (TW) 101140470

Publication Classification

(51) **Int. Cl.**
H01Q 1/22 (2006.01)

(52) **U.S. Cl.**
CPC ***H01Q 1/22*** (2013.01)
USPC **343/720**

(57) **ABSTRACT**

A smart electric meter is provided. The smart electric meter includes a body, an antenna holder, an antenna structure and a supporting member. The antenna holder is disposed on the body, wherein the antenna holder is annular. The antenna structure is disposed on the antenna holder, wherein the antenna structure is moveable along a circumferential direction of the antenna holder. The supporting member is connected to the antenna structure, wherein the supporting member is moveably disposed on the antenna holder, and the supporting member moves the antenna structure along the circumferential direction of the antenna holder.

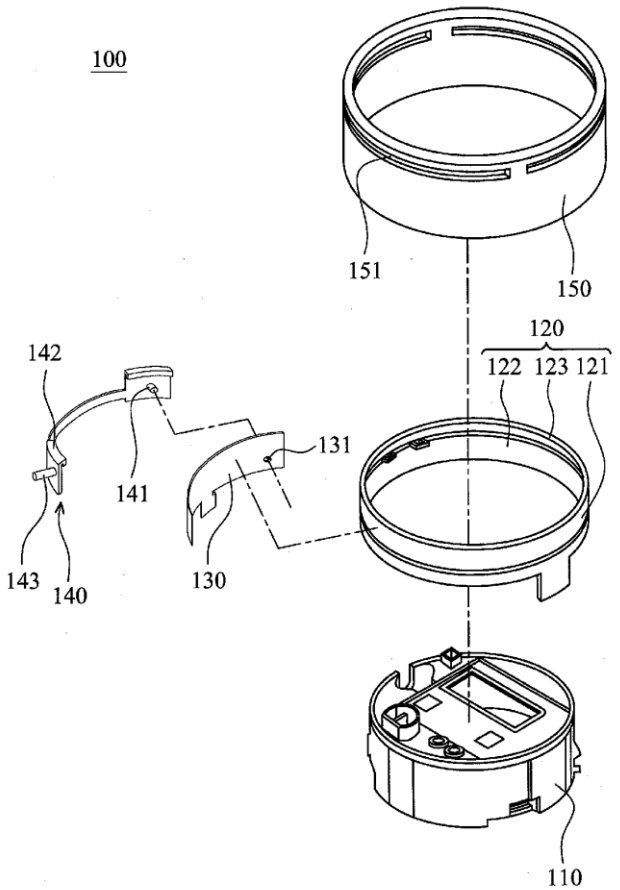

US 20140118204A1

(19) **United States**

(12) **Patent Application Publication**

Gavilan et al.

(10) **Pub. No.: US 2014/0118204 A1**

(43) **Pub. Date: May 1, 2014**

(54) **ANTENNA INTEGRATED WITH METAL CHASSIS**

(71) Applicant: **NVIDIA CORPORATION**, Santa Clara, CA (US)

(72) Inventors: **Joselito Gavilan**, Santa Clara, CA (US); **Warren Lee**, Santa Clara, CA (US)

(73) Assignee: **NVIDIA CORPORATION**, Santa Clara, CA (US)

(21) Appl. No.: **13/711,951**

(22) Filed: **Dec. 12, 2012**

Related U.S. Application Data

(60) Provisional application No. 61/721,358, filed on Nov. 1, 2012.

Publication Classification

(51) **Int. Cl.**
H01Q 1/50 (2006.01)

(52) **U.S. Cl.**
CPC ***H01Q 1/50*** (2013.01)
USPC **343/745**; 343/749

(57) **ABSTRACT**

One aspect provides an antenna. The antenna, in this aspect, includes a grounded segment extending from a metal chassis of an electronic device, and a feed portion coplanar with the grounded segment, the grounded segment and feed portion jointly tuned to cause the antenna to communicate in selected bands of frequencies.

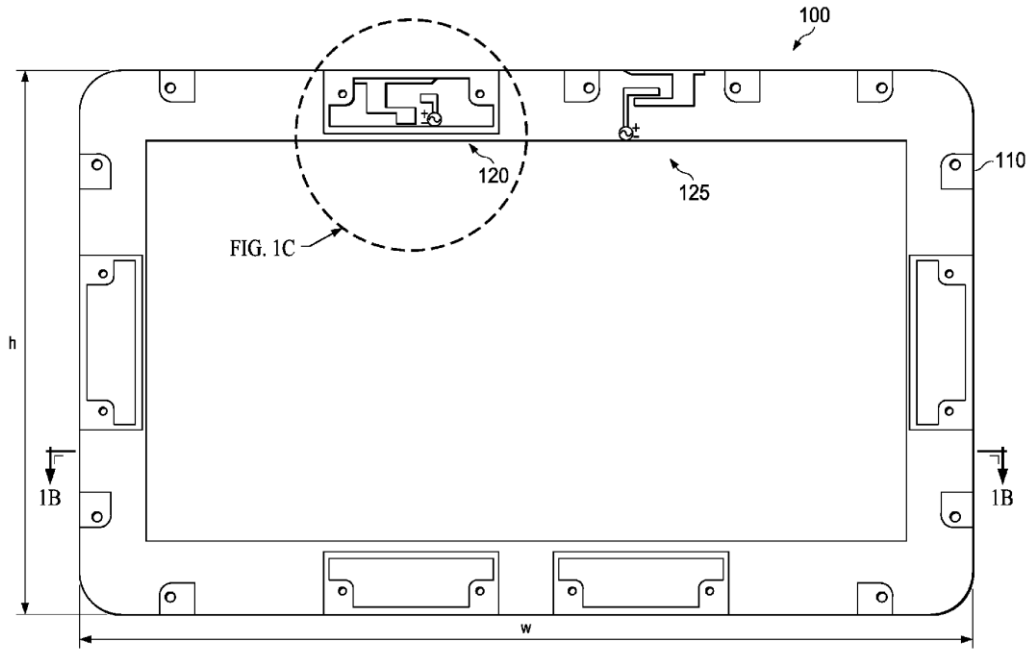

FIG. 1A

US 20140118205A1

(19) **United States**

(12) **Patent Application Publication**

du Toit et al.

(10) **Pub. No.: US 2014/0118205 A1**

(43) **Pub. Date: May 1, 2014**

(54) **TUNABLE MICROWAVE DEVICES WITH AUTO-ADJUSTING MATCHING CIRCUIT**

(71) Applicant: **BlackBerry Limited**, Waterloo (CA)

(72) Inventors: **Cornelis Frederik du Toit**, Ellicott City, MD (US); **Deirdre A. Ryan**, Poquoson, VA (US); **Gregory Mendolia**, Nashua, NH (US); **James Martin**, Londonderry, NH (US); **Izz Khayo**, Burlington, MA (US); **Heinz Bachmann**, Stow, MA (US); **William E. McKinzie**, Fulton, MD (US)

(73) Assignee: **BlackBerry Limited**, Waterloo (CA)

(21) Appl. No.: **14/149,849**

(22) Filed: **Jan. 8, 2014**

Related U.S. Application Data

(60) Continuation of application No. 13/745,624, filed on Jan. 18, 2013, which is a continuation of application No. 12/952,395, filed on Nov. 23, 2010, which is a continuation of application No. 11/245,898, filed on Oct. 8, 2005, now Pat. No. 7,865,154, which is a continuation-in-part of application No. 10/938,898, filed on Sep. 10, 2004, now abandoned, which is a continuation of application No. 10/455,901, filed on Jun. 6, 2003, now Pat. No. 6,864,757, which is a division of application No. 09/909,187, filed on Jul. 19, 2001, now Pat. No. 6,590,468.

(60) Provisional application No. 60/219,500, filed on Jul. 20, 2000.

Publication Classification

(51) **Int. Cl.**

H03H 7/40 (2006.01)

H01Q 1/50 (2006.01)

(52) **U.S. Cl.**

CPC .. ***H03H 7/40*** (2013.01); ***H01Q 1/50*** (2013.01)

USPC **343/745**; 333/17.3

(57) **ABSTRACT**

An embodiment of the present disclosure provides a circuit including an antenna having a tunable component. The tunable component can be operable to receive a variable signal to cause the tunable component to change a reactance of the antenna. The tunable component can include a first conductor coupled to the antenna, a second conductor, and a tunable material positioned between the first conductor and the second conductor, where at least one of the first conductor or the second conductor, or both are adapted to receive the variable signal to cause the change in the reactance of the antenna. Additional embodiments are disclosed.

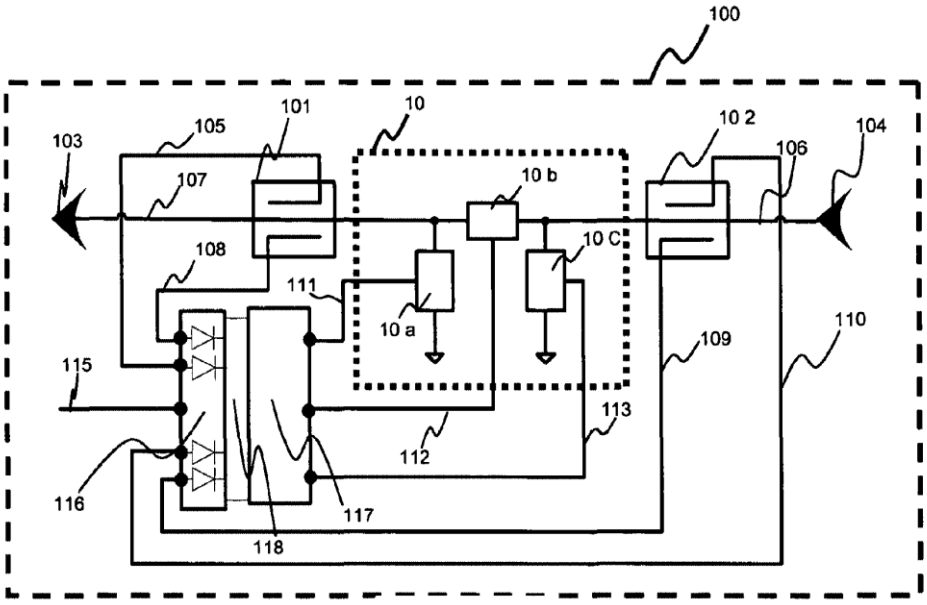

US 20140118207A1

(19) **United States**

(12) **Patent Application Publication**

CHANG et al.

(10) **Pub. No.: US 2014/0118207 A1**

(43) **Pub. Date: May 1, 2014**

(54) **ANTENNA ASSEMBLY**

(71) Applicant: **CHIUN MAI COMMUNICATION SYSTEMS, INC.**, New Taipei (TW)

(72) Inventors: **TZE-HSUAN CHANG**, New Taipei (TW); **CHO-KANG HSU**, New Taipei (TW)

(73) Assignee: **CHIUN MAI COMMUNICATION SYSTEMS, INC.**, New Taipei (TW)

(21) Appl. No.: **14/019,683**

(22) Filed: **Sep. 6, 2013**

(30) **Foreign Application Priority Data**

Oct. 31, 2012 (TW) 101140224

Publication Classification

(51) **Int. Cl.**
H01Q 13/10 (2006.01)

(52) **U.S. Cl.**
CPC ***H01Q 13/10*** (2013.01)
USPC **343/767**

(57) **ABSTRACT**

An antenna assembly of very small size includes a base board, a ground plane, a feed portion, and a radiating portion. The base board includes a first surface and a second surface opposite to the first surface. The ground plane is positioned on the first surface and configured to provide ground for the antenna assembly. One end of the feed portion is attached to the second surface and is extended to the first surface with another end of the feed portion attached to the first surface. The radiating portion is formed by exposing portions of the ground plane and coupling the removed portion with the feed portion to form a slot antenna.

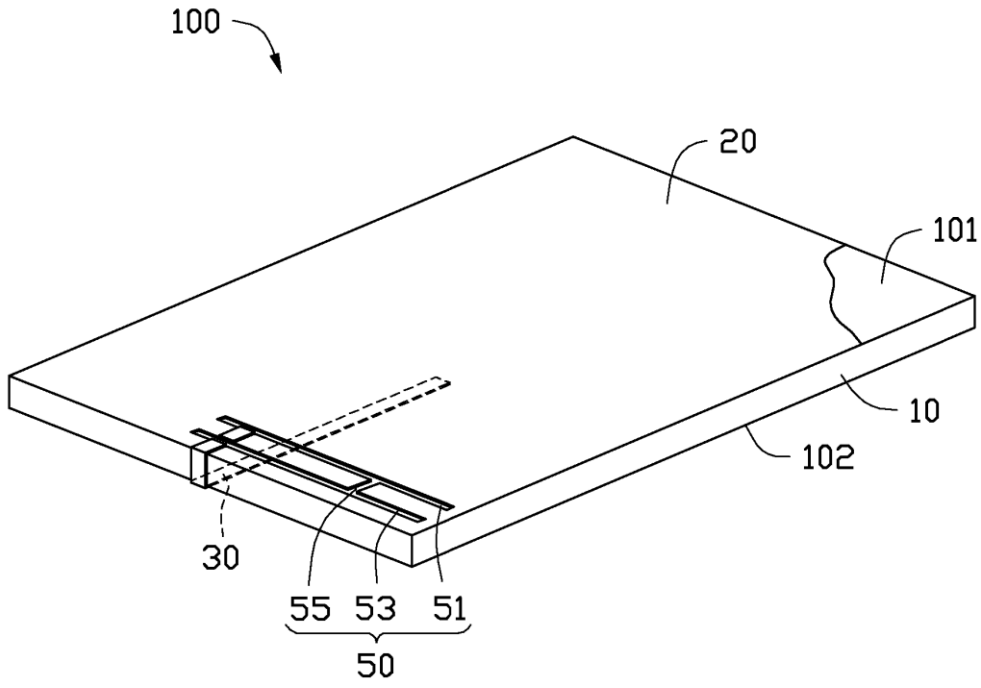

US 20140118214A1

(19) **United States**

(12) **Patent Application Publication**

(10) **Pub. No.: US 2014/0118214 A1**

(43) **Pub. Date: May 1, 2014**

TANAKA

(54) **ANTENNA DEVICE**

(71) Applicant: **Murata Manufacturing Co., Ltd.**, Kyoto (JP)

(72) Inventor: **Hiroya TANAKA**, Kyoto (JP)

(73) Assignee: **Murata Manufacturing Co., Ltd.**, Kyoto (JP)

(21) Appl. No.: **14/068,953**

(22) Filed: **Oct. 31, 2013**

(30) **Foreign Application Priority Data**

Oct. 31, 2012 (JP) 2012-240832
Oct. 22, 2013 (JP) 2013-218903

Publication Classification

(51) **Int. Cl.**
H01Q 21/28 (2006.01)

(52) **U.S. Cl.**
CPC ***H01Q 21/28*** (2013.01)
USPC **343/852**; 343/853

(57) **ABSTRACT**

In an antenna device, power is fed from a first port to a first radiation element, and power is fed from a second port to a second radiation element. A decoupling circuit connects the first radiation element and the second radiation element, and includes a bridge element connecting a first point between the first port and the first radiation element and a second point between the second port and the second radiation element to each other. A first reactance element is provided in series with the first radiation element between the first point and the first radiation element, and a second reactance element is provided in series with the second radiation element between the second point and the second radiation element. At least one of the first reactance element and the second reactance element is configured so as to be capable of changing the value of reactance.

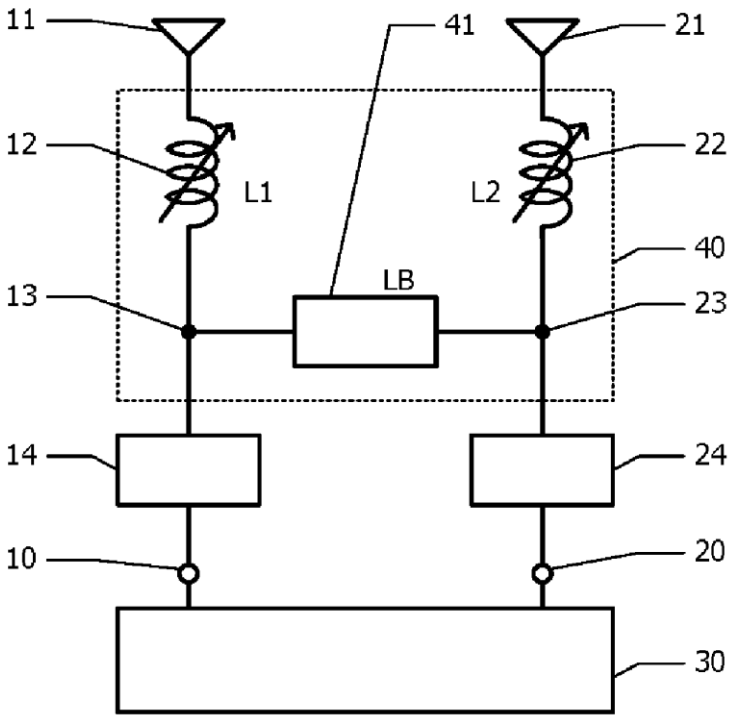

US 20140118215A1

(19) **United States**

(12) **Patent Application Publication**

(10) **Pub. No.: US 2014/0118215 A1**

(43) **Pub. Date: May 1, 2014**

Hsu

(54) **ANTENNA ASSEMBLY AND WIRELESS COMMUNICATION DEVICE PROVIDED WITH THE SAME**

(71) Applicant: **WISTRON NEWEB CORP.**, Hsunchu County (TW)

(72) Inventor: **Mao-Kai Hsu**, Hsinchu County (TW)

(73) Assignee: **Wistron NeWeb Corp.**, Hsinchu County (TW)

(21) Appl. No.: **13/832,640**

(22) Filed: **Mar. 15, 2013**

(30) **Foreign Application Priority Data**

Oct. 29, 2012 (TW) 101139932

Publication Classification

(51) **Int. Cl.**
H01Q 21/28 (2006.01)

(52) **U.S. Cl.**
CPC ***H01Q 21/28*** (2013.01)
USPC **343/853**

(57) **ABSTRACT**

An antenna assembly includes a pair of antennas and an interconnecting portion. Each antenna includes a ground portion, a feed-in portion spaced apart from the ground portion and having a feed-in end that is configured to be fed with a RF signal, a short-circuit portion electrically connected to the ground portion and the feed-in portion, and a radiating portion electrically connected to the feed-in portion and spaced apart from the ground portion. The interconnecting portion is electrically connected between the short-circuit portions and between the ground portions of the pair of antennas, and is formed with a U-shaped main groove that has a pair of opposite ends adjacent to the pair of antennas, respectively.

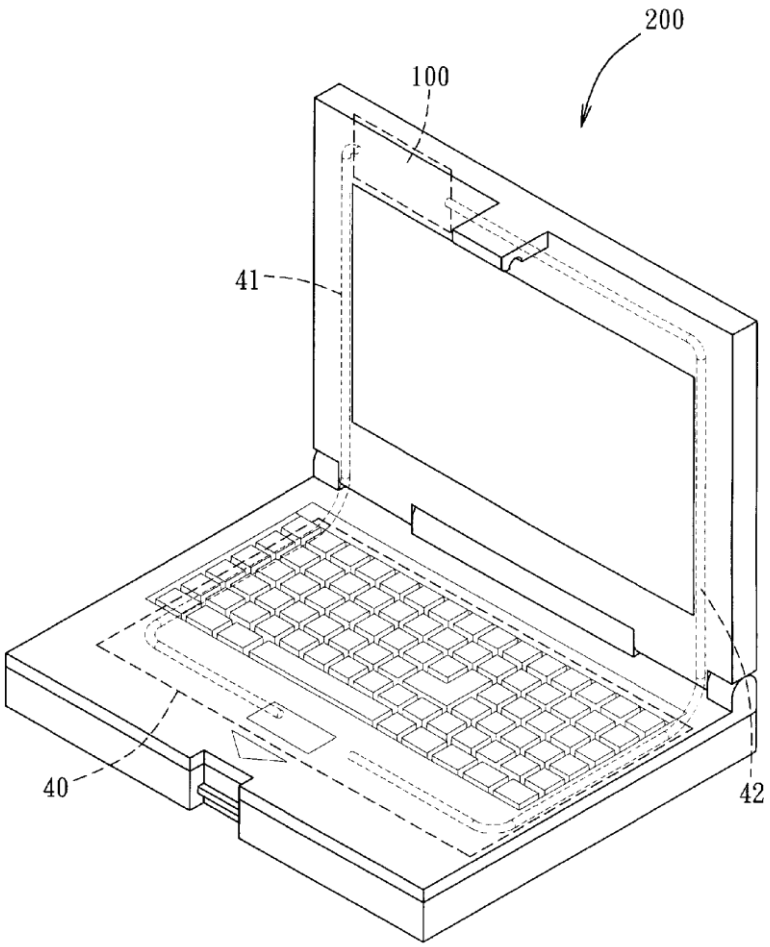

US 20140120991A1

(19) **United States**

(12) **Patent Application Publication**

WONG et al.

(10) **Pub. No.: US 2014/0120991 A1**

(43) **Pub. Date: May 1, 2014**

(54) **MOBILE WIRELESS COMMUNICATIONS DEVICE WITH MULTIPLE-BAND ANTENNA AND RELATED METHODS**

(71) Applicant: **RESEARCH IN MOTION LIMITED**, Waterloo (CA)

(72) Inventors: **Joshua Kwan Ho WONG**, Waterloo (CA); **Adrian Matthew Cooke**, Kitchener (CA); **Zhong Yi Loy**, Kitchener (CA); **Mun Soo Bae**, Waterloo (CA)

(73) Assignee: **RESEARCH IN MOTION LIMITED**, Waterloo (CA)

(21) Appl. No.: **13/660,233**

(22) Filed: **Oct. 25, 2012**

Publication Classification

(51) **Int. Cl.**
H04M 1/02 (2006.01)

(52) **U.S. Cl.**
CPC ***H04M 1/0249*** (2013.01)
USPC **455/575.1**

(57) **ABSTRACT**

A mobile wireless communications device may include a housing, a wireless transceiver carried by the housing and having a primary output, and a secondary output, and a multiple-band antenna carried by the housing and coupled to the wireless transceiver. The multiple-band antenna may include a dielectric substrate and a pattern of electrically conductive traces thereon defining a primary radiator and a secondary radiator spaced apart from the primary radiator. The primary radiator may include a first elongate member having a primary feed coupled to the primary output, and a first reference member spaced from the first elongate member and at least partially laterally surrounding the first elongate member and coupled to a reference voltage. The secondary radiator may include a second elongate member having a secondary feed coupled to the secondary output.

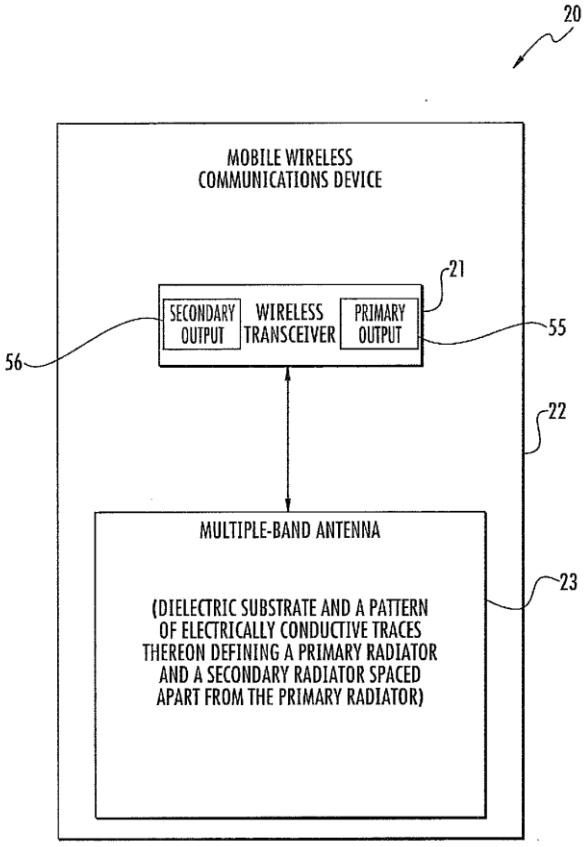

US 20140125526A1

(19) **United States**

(12) **Patent Application Publication**

HONG et al.

(10) **Pub. No.: US 2014/0125526 A1**

(43) **Pub. Date: May 8, 2014**

(54) **MULTIBAND ANTENNA AND ELECTRONIC APPARATUS HAVING THE SAME**

(71) Applicant: **SAMSUNG ELECTRONICS CO., LTD.**, Suwon-si (KR)

(72) Inventors: **Won-bin HONG**, Seoul (KR); **Young-ju LEE**, Seoul (KR); **Alexander GOUDELEV**, Suwon-si (KR); **Kwang-hyun BAEK**, Anseong-si (KR)

(21) Appl. No.: **13/933,719**

(22) Filed: **Jul. 2, 2013**

(30) **Foreign Application Priority Data**

Nov. 8, 2012 (KR) 10-2012-0126121

Publication Classification

(51) **Int. Cl.**
H01Q 5/00 (2006.01)

(52) **U.S. Cl.**
CPC ***H01Q 5/0024*** (2013.01)
USPC ..... **343/700 MS**

(57) **ABSTRACT**

A multiband antenna apparatus and an electronic apparatus having the multiband antenna apparatus are provided. The multiband antenna apparatus includes: a low frequency antenna which transmits and receives at least one low frequency band signal; and a high frequency antenna which transmits and receives at least one high frequency band signal, wherein the low frequency antenna includes a single wing part which emits an electric wave.

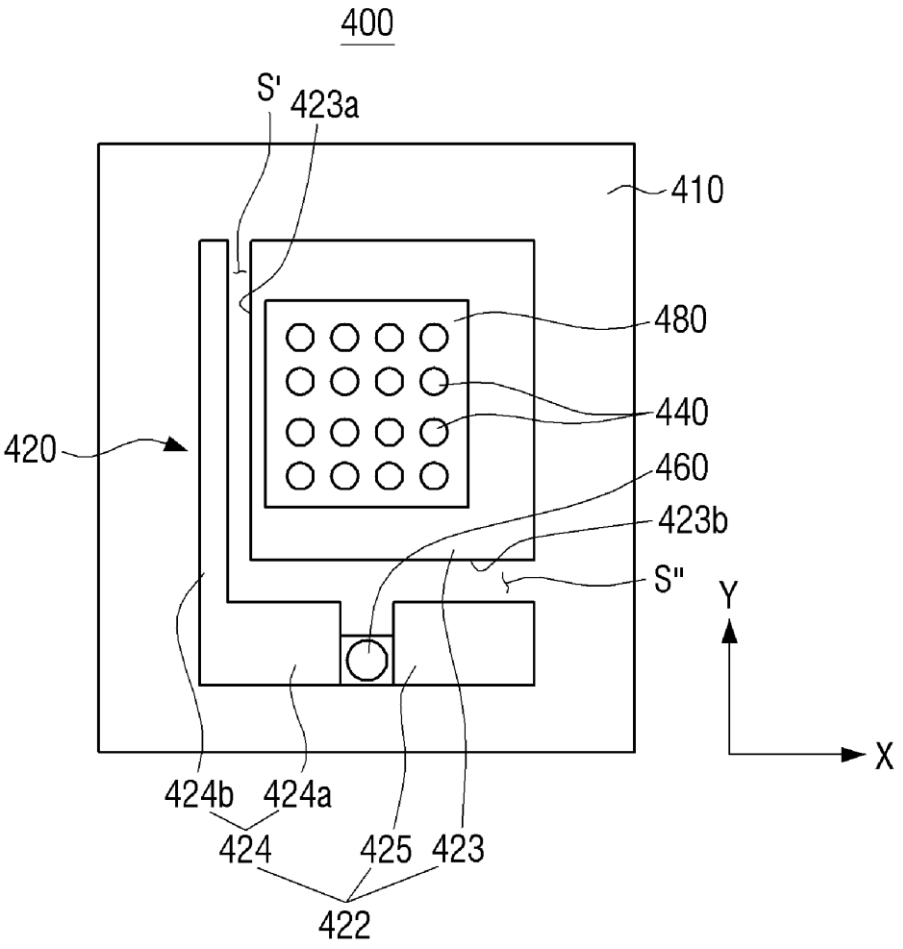

US 20140125527A1

(19) **United States**

(12) **Patent Application Publication**

TAI

(10) **Pub. No.: US 2014/0125527 A1**

(43) **Pub. Date: May 8, 2014**

(54) **MULTI-BAND ANTENNA**

(71) Applicant: **HON HAI PRECISION INDUSTRY CO., LTD.**, New Taipei (TW)

(72) Inventor: **LUNG-SHENG TAI**, New Taipei (TW)

(73) Assignee: **HON HAI PRECISION INDUSTRY CO., LTD.**, New Taipei (TW)

(21) Appl. No.: **14/073,884**

(22) Filed: **Nov. 7, 2013**

(30) **Foreign Application Priority Data**

Nov. 7, 2012 (TW) 101141447

Publication Classification

(51) **Int. Cl.**
H01Q 9/04 (2006.01)

(52) **U.S. Cl.**
CPC ***H01Q 9/04*** (2013.01)
USPC ..... **343/700 MS**

(57) **ABSTRACT**

An multi-band antenna includes a base section including a first end and a second end opposite to each other, a first radiating arm and a second radiating arm extending opposite to each other from the first end and locating on two opposite sides of the base section in a longitudinal direction, and a loop conductive portion extending from the base section. The loop conductive portion includes a grounding portion locating adjacent to the second end of the base section and a connecting portion extending in the longitudinal direction. The connecting portion is located on the same side of the base section with the first radiating arm.

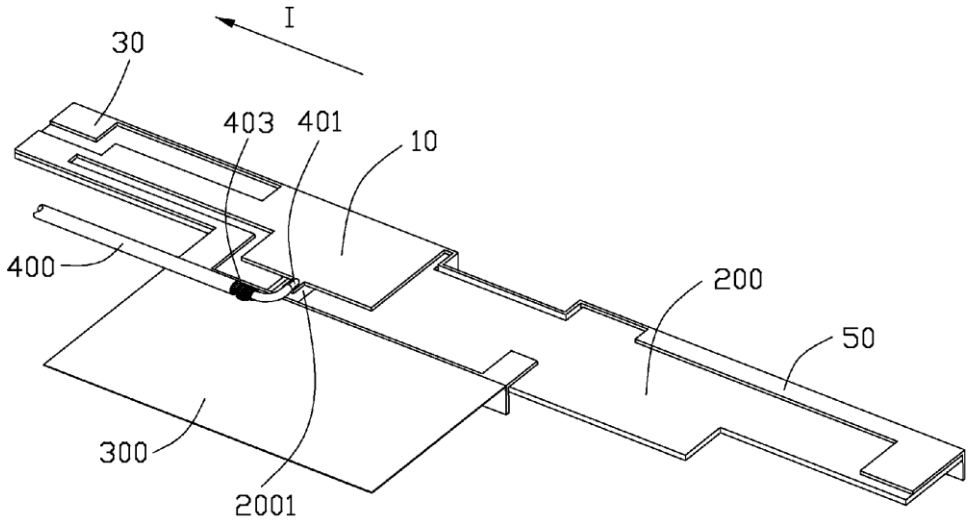

US 20140125528A1

(19) United States

(12) Patent Application Publication

(10) Pub. No.: US 2014/0125528 A1

(43) Pub. Date: May 8, 2014

TSAI et al.

(54) **MOBILE DEVICE AND ANTENNA STRUCTURE**

(71) Applicant: **HTC CORPORATION**, Taoyuan City (TW)

(72) Inventors: **Tiao-Hsing TSAI**, Taoyuan City (TW); **Chien-Pin CHIU**, Taoyuan City (TW); **Hsiao-Wei WU**, Taoyuan City (TW); **Chao-Chiang KUO**, Taoyuan City (TW)

(73) Assignee: **HTC CORPORATION**, Taoyuan City (TW)

(21) Appl. No.: **13/672,464**

(22) Filed: **Nov. 8, 2012**

Publication Classification

(51) **Int. Cl.**

H01Q 1/24 (2006.01)

H01Q 13/10 (2006.01)

(52) **U.S. Cl.**

CPC ***H01Q 1/243*** (2013.01); ***H01Q 13/106*** (2013.01)

USPC **343/702**

(57) **ABSTRACT**

A mobile device includes a dielectric substrate, a metal layer, a metal housing, a nonconductive partition, at least one connection element, and a feeding element. The metal layer is disposed on the dielectric substrate, and includes an upper element and a main element, wherein a slot is formed between the upper element and the main element. The metal housing is substantially a hollow structure, and has a slit, wherein the slit is substantially aligned with the slot of the metal layer. The connection element couples the upper element of the metal layer to the metal housing. The feeding element is coupled to the upper element of the metal layer or coupled to the metal housing. An antenna structure is formed by the feeding element, the upper element of the metal layer, the connection element, and the metal housing.

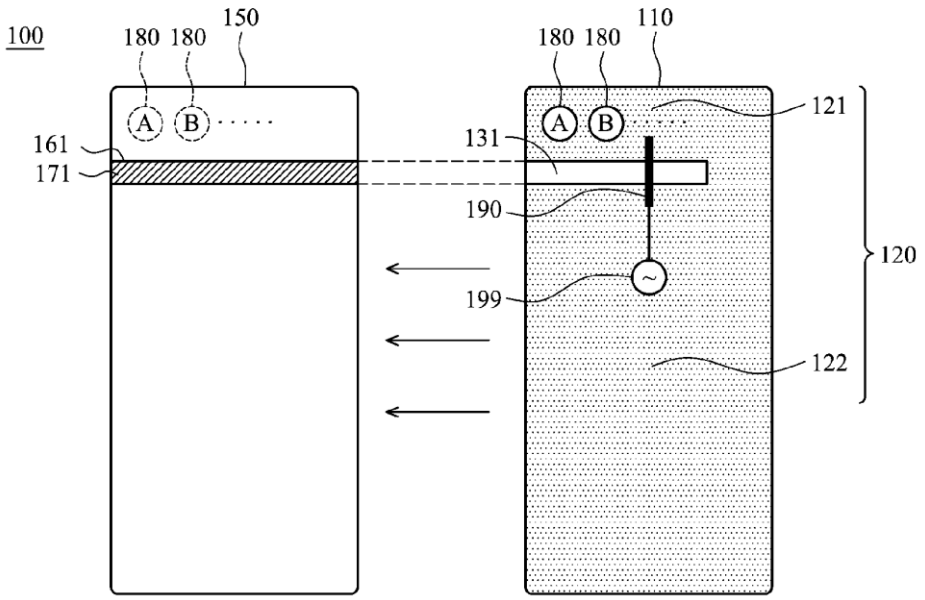

US 20140125529A1

(19) **United States**

(12) **Patent Application Publication**

PARK et al.

(10) **Pub. No.: US 2014/0125529 A1**

(43) **Pub. Date: May 8, 2014**

(54) **ANTENNA DEVICE AND ELECTRONIC APPLIANCE HAVING THE SAME**

(71) Applicant: **SAMSUNG ELECTRONICS CO., LTD.**, Suwon-si (KR)

(72) Inventors: **Jung-min PARK**, Seoul (KR); **Byung-chul KIM**, Hwaseong-si (KR); **Hyun-jin KIM**, Seoul (KR); **Young-ju LEE**, Seoul (KR)

(21) Appl. No.: **13/929,385**

(22) Filed: **Jun. 27, 2013**

(30) **Foreign Application Priority Data**

Nov. 8, 2012 (KR) 10-2012-0126130

Publication Classification

(51) **Int. Cl.**
H01Q 1/24 (2006.01)

(52) **U.S. Cl.**
CPC ***H01Q 1/241*** (2013.01)
USPC **343/702**

(57) **ABSTRACT**

An antenna device which is built into an electronic appliance having a metal cover provided with a radio wave passer is provided. The electronic apparatus includes an antenna portion arranged adjacent to the radio wave passer so as to be capable of transmitting and receiving radio waves through the radio wave passer. A reflecting portion which reflects the radio waves radiated from the antenna portion is located on an opposite side of the antenna portion, so that the antenna portion is between the reflecting portion and the radio wave passer.

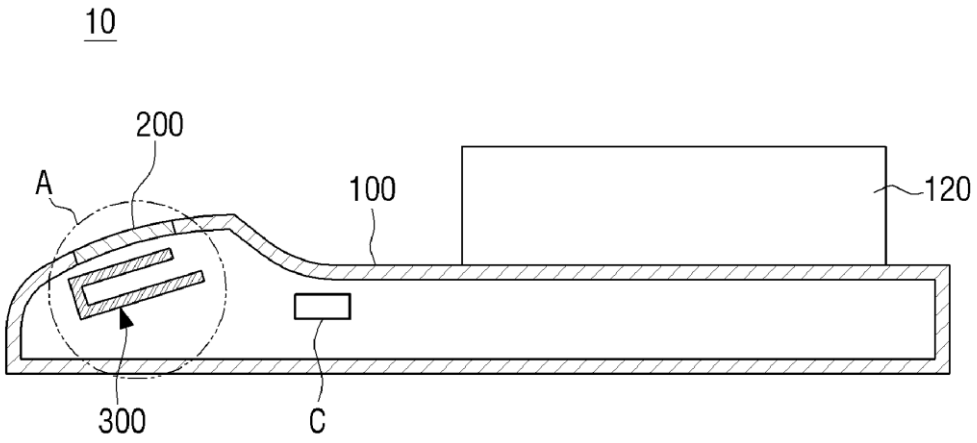

US 20140125534A1

(19) **United States**

(12) **Patent Application Publication**

ISHIKAWA

(10) **Pub. No.: US 2014/0125534 A1**

(43) **Pub. Date: May 8, 2014**

(54) **ANTENNA APPARATUS**

(71) Applicant: **FUJITSU LIMITED**, Kawasaki-shi (JP)

(72) Inventor: **Shohei ISHIKAWA**, Yokohama (JP)

(73) Assignee: **FUJITSU LIMITED**, Kawasaki-shi (JP)

(21) Appl. No.: **13/964,679**

(22) Filed: **Aug. 12, 2013**

(30) **Foreign Application Priority Data**

Nov. 5, 2012 (JP) 2012-243795

Publication Classification

(51) **Int. Cl.**
H01Q 21/24 (2006.01)

(52) **U.S. Cl.**
CPC ***H01Q 21/245*** (2013.01)
USPC **343/730**

(57) **ABSTRACT**

According to an embodiment, an antenna apparatus include a ground plate; a first element disposed along the ground plate; a second element disposed along the first element at an opposing side of the ground plate; a connecting part to connect first and second terminal parts of the first element with first and second terminal parts of the second element, respectively, or to connect the first and second terminal parts of the first element with the ground plate; a first power feeding portion to feed power at a midpoint of the first or second element in a longitudinal direction when the first and second elements are connected together by the connecting part; and a second power feeding portion to feed power to the first element or the ground plate when the first element and the ground plate are connected together by the connecting part.

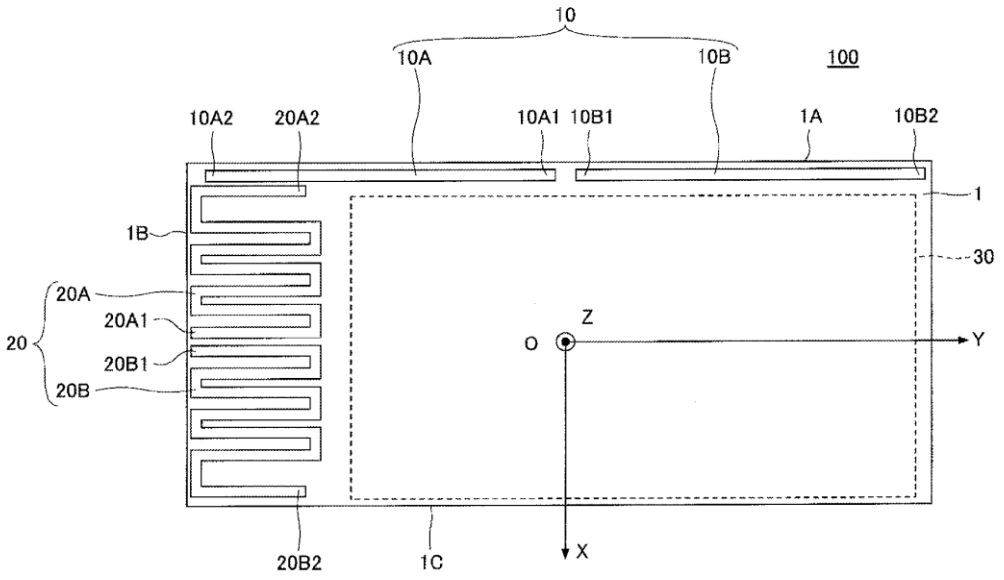

US 20140125535A1

(19) **United States**

(12) **Patent Application Publication**

Ramachandran et al.

(10) **Pub. No.: US 2014/0125535 A1**

(43) **Pub. Date: May 8, 2014**

(54) **CAPACITIVELY COUPLED ANTENNA APPARATUS AND METHODS**

(71) Applicant: **Pulse Finland OY**, Kempele (FI)

(72) Inventors: **Prasadh Ramachandran**, Oulu (FI); **Petteri Annamaa**, Oulunsalo (FI)

(21) Appl. No.: **13/794,343**

(22) Filed: **Mar. 11, 2013**

Related U.S. Application Data

(60) Provisional application No. 61/723,243, filed on Nov. 6, 2012.

Publication Classification

(51) **Int. Cl.**
H01Q 9/30 (2006.01)

(52) **U.S. Cl.**
CPC ***H01Q 9/30*** (2013.01)
USPC **343/745**; 343/749

(57) **ABSTRACT**

Capacitively coupled antenna apparatus and methods of operating and adaptively tuning the same. In one embodiment, the insertion loss component in "beside the hand/head" use scenarios is significantly reduced or eliminated such that the antenna experiences only absorptive losses (which generally cannot be avoided), and a very small insertion loss by the host device radio frequency tuner. The exemplary antenna apparatus may be configured for multi-band operation, and also has a very small form factor (e.g., 3 mm ground clearance only at the bottom of the PCB, 4 mm height in one implementation), thereby allowing for use in spatially compact host devices such as slim-line smartphones, tablets, and the like. The adaptive antenna arrangement (using capacitive feed) can be tuned such that the tuner is used in free space, and the user's hand/head tunes the antenna to the band of interest while in use.

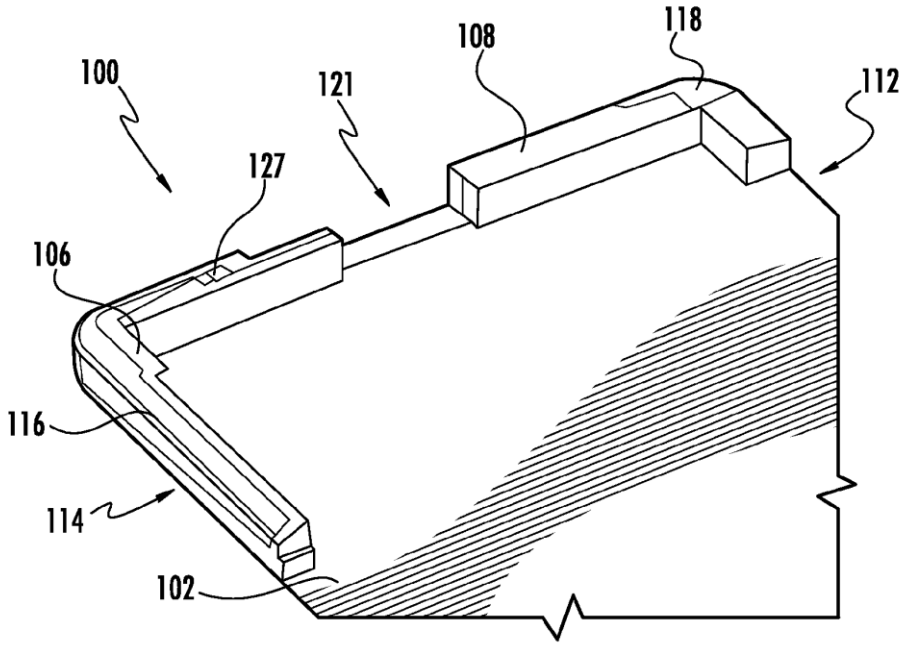

US 20140125536A1

(19) **United States**

(12) **Patent Application Publication**

WONG et al.

(10) **Pub. No.: US 2014/0125536 A1**

(43) **Pub. Date: May 8, 2014**

(54) **COMMUNICATION DEVICE AND WIDE-BAND ANTENNA ELEMENT THEREIN**

(71) Applicant: **ACER INCORPORATED**, Taipei Hsien (TW)

(72) Inventors: **Kin-Lu WONG**, Kaohsiung City (TW); **Fang-Hsien CHU**, Kaohsiung City (TW)

(73) Assignee: **ACER INCORPORATED**, Taipei Hsien (TW)

(21) Appl. No.: **13/732,689**

(22) Filed: **Jan. 2, 2013**

(30) **Foreign Application Priority Data**

Nov. 5, 2012 (TW) 101140941

Publication Classification

(51) **Int. Cl.**
H01Q 5/00 (2006.01)

(52) **U.S. Cl.**
CPC ***H01Q 5/0034*** (2013.01)
USPC **343/749**

(57) **ABSTRACT**

A communication device including a ground element and an antenna element is provided. The antenna element is disposed adjacent to the ground element. The antenna element includes a first radiation element and a second radiation element. The first radiation element includes a first portion and a second portion. The first portion is coupled through an inductive element to the second portion. The first portion is coupled to a signal source. The second portion includes a plurality of bends such that a coupling gap is formed between an open end of the second portion and the first portion. The second radiation element has a shorted end and an open end. The shorted end of the second radiation element is coupled to the ground element. The second radiation element extends and at least partially surrounds the first radiation element.

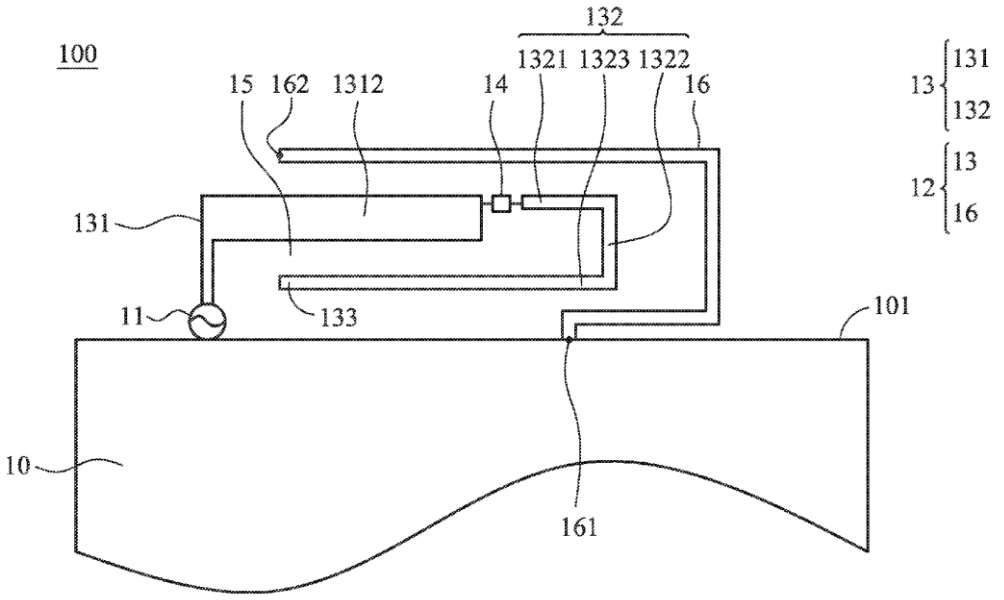

US 20140125540A1

(19) **United States**

(12) **Patent Application Publication**

TETSUNO et al.

(10) **Pub. No.: US 2014/0125540 A1**

(43) **Pub. Date: May 8, 2014**

(54) **ANTENNA MODULE AND COMMUNICATION DEVICE EQUIPPED THEREWITH**

(71) Applicant: **Murata Manufacturing Co., Ltd.**, Nagaokakyo-shi (JP)

(72) Inventors: **Hiroyuki TETSUNO**, Nagaokakyo-shi (JP); **Taro HIRAI**, Nagaokakyo-shi (JP)

(73) Assignee: **Murata Manufacturing Co., Ltd.**, Nagaokakyo-shi (JP)

(21) Appl. No.: **14/064,246**

(22) Filed: **Oct. 28, 2013**

(30) **Foreign Application Priority Data**

Nov. 8, 2012 (JP) 2012-246400

Publication Classification

(51) **Int. Cl.**
H01Q 1/50 (2006.01)

(52) **U.S. Cl.**
CPC ***H01Q 1/50*** (2013.01)
USPC **343/822**; 343/860

(57) **ABSTRACT**

An RF signal input and output to and from a communication unit is extracted to outside of an antenna module before the RF signal is routed through a matching circuit unit and an antenna unit and a variation occurs, and the RF signal is accurately measured and inspected using a high-frequency wave measuring instrument such as a network analyzer. When the characteristics of the antenna unit have fluctuated or been deteriorated after the antenna module has been installed in a communication device, a measure is implemented by connecting an external matching circuit unit or an external antenna unit to a signal extraction unit.

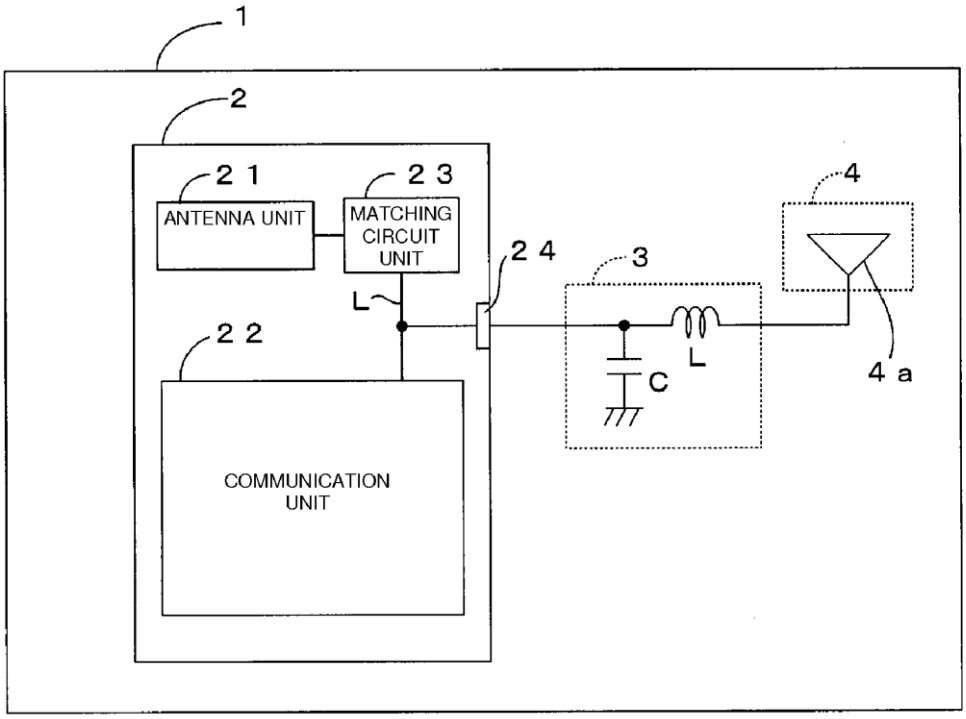

US 20140125543A1

(19) **United States**

(12) **Patent Application Publication**

Chen et al.

(10) **Pub. No.: US 2014/0125543 A1**

(43) **Pub. Date: May 8, 2014**

(54) **DECOUPLING CIRCUIT AND ANTENNA DEVICE**

(71) Applicant: **WISTRON NEWEB CORPORATION**, Hsinchu (TW)

(72) Inventors: **I-Shan Chen**, Hsinchu (TW); **Chao-Chun Lin**, Hsinchu (TW); **Yi-Chieh Wang**, Hsinchu (TW); **Cheng-Hsiung Hsu**, Hsinchu (TW)

(73) Assignee: **WISTRON NEWEB CORPORATION**, Hsinchu (TW)

(21) Appl. No.: **13/789,613**

(22) Filed: **Mar. 7, 2013**

(30) **Foreign Application Priority Data**

Nov. 6, 2012 (TW) 101141134

Publication Classification

(51) **Int. Cl.**
H01Q 21/28 (2006.01)

(52) **U.S. Cl.**
CPC ***H01Q 21/28*** (2013.01)
USPC **343/841**

(57) **ABSTRACT**

A decoupling circuit for enhancing isolation of two antennas is disclosed. The two antennas are substantially symmetrically disposed on a substrate. The decoupling circuit includes a first and second metal strips parallel disposed between the two antennas and electrically connected to a ground, a connection strip electrically connected between terminals of the first and second metal strips, to substantially form a door-frame structure, a first comb structure comprising a plurality of metal segments parallel to each other, disposed on the substrate, electrically connected to and perpendicular to the first metal strip, and a second comb structure comprising a plurality of metal segments parallel to each other, disposed on the substrate, electrically connected to and perpendicular to the second metal strip.

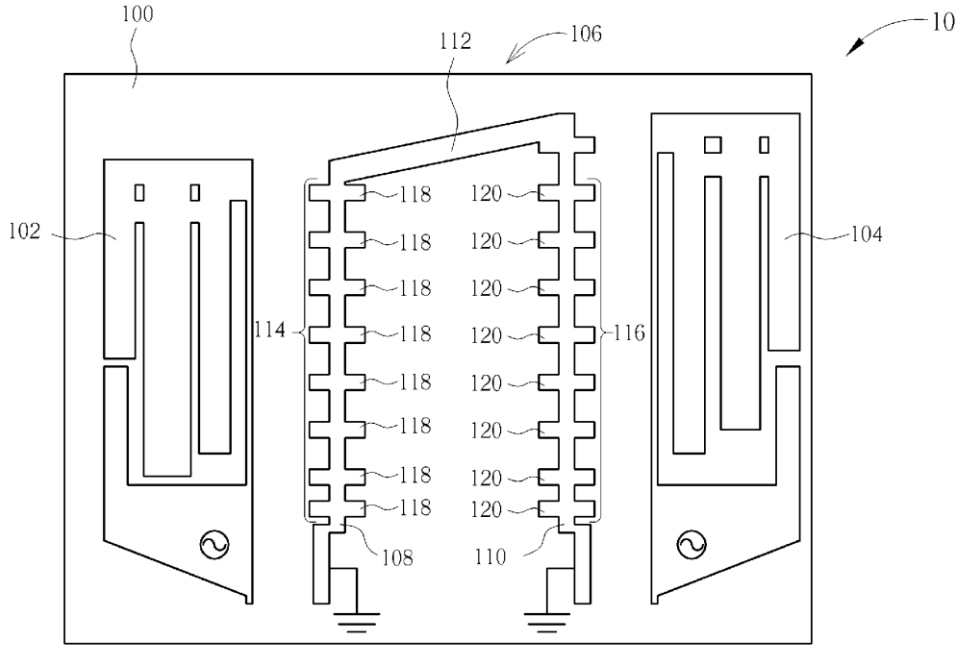

US 20140125547A1

(19) **United States**

(12) **Patent Application Publication**

Liu et al.

(10) **Pub. No.: US 2014/0125547 A1**

(43) **Pub. Date: May 8, 2014**

(54) **LOOP ANTENNA**

(71) Applicant: **ASKEY COMPUTER CORP.**, New Taipei City (TW)

(72) Inventors: **Chien-Sheng Liu**, Chiayi County (TW); **Wei-Lu Hung**, Taipei City (TW); **Sheng-Hsin Chang**, Kaohsiung City (TW)

(73) Assignee: **ASKEY COMPUTER CORP.**, New Taipei City (TW)

(21) Appl. No.: **13/961,894**

(22) Filed: **Aug. 8, 2013**

(30) **Foreign Application Priority Data**

Nov. 7, 2012 (TW) 101141444

Publication Classification

(51) **Int. Cl.**
H01Q 7/00 (2006.01)

(52) **U.S. Cl.**
CPC ***H01Q 7/005*** (2013.01)
USPC **343/866**

(57) **ABSTRACT**

A loop antenna adapted for a communication device is provided. The loop antenna includes a feed, a ground, a circular loop, at least one first tuning element, and at least one second tuning element. The circular loop is connected to the feed and the ground. The first tuning element is extended from the circular loop and corresponds to a first frequency band. The second tuning element is extended from the circular loop and corresponds to a second frequency band. Bandwidths of the first frequency band and the second frequency band of the loop antenna are changed by adjusting the first tuning element and the second tuning element, respectively.

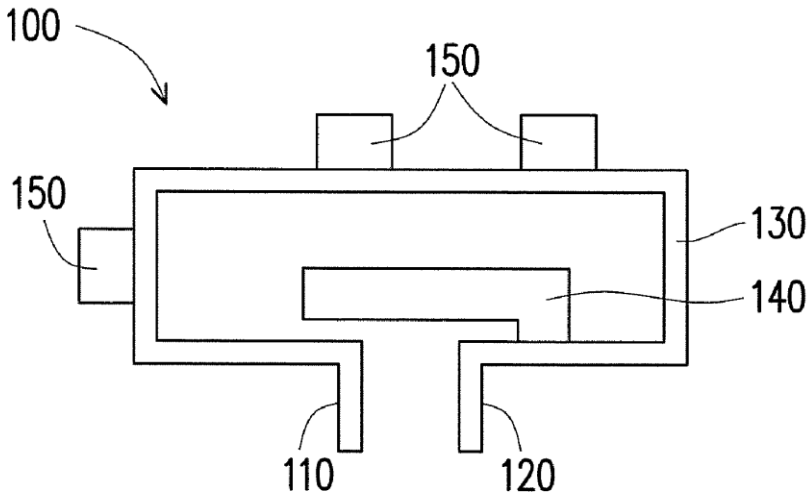

US 20140128007A1

(19) **United States**

(12) **Patent Application Publication**

CHEN et al.

(10) **Pub. No.: US 2014/0128007 A1**

(43) **Pub. Date: May 8, 2014**

(54) **MOBILE DEVICE AND TUNABLE ANTENNA THEREIN**

(71) Applicant: **HTC CORPORATION**, Taoyuan City (TW)

(72) Inventors: **Ju-Hung CHEN**, Taoyuan City (TW); **Chien-Pin CHIU**, Taoyuan City (TW); **Chang-Yen CHENG**, Taoyuan City (TW); **Chi-Hsien CHIU**, Taoyuan City (TW)

(73) Assignee: **HTC CORPORATION**, Taoyuan City (TW)

(21) Appl. No.: **13/670,068**

(22) Filed: **Nov. 6, 2012**

Publication Classification

(51) **Int. Cl.**
H04B 1/40 (2006.01)

(52) **U.S. Cl.**
CPC ***H04B 1/40*** (2013.01)
USPC **455/77**

(57) **ABSTRACT**

A mobile device includes an antenna, an ESD (Electrostatic Discharge) protection component, a plurality of branches, and a switch. The antenna is configured to transmit and receive an RF (Radio Frequency) signal. The branches provide different inductances or different capacitances, and are respectively coupled to a ground voltage terminal. The switch is coupled through the ESD protection component to the antenna, and switches between the branches according to a control signal such that the antenna is capable of operating in a plurality of frequency intervals. The ESD protection component is configured to protect the switch from being damaged.

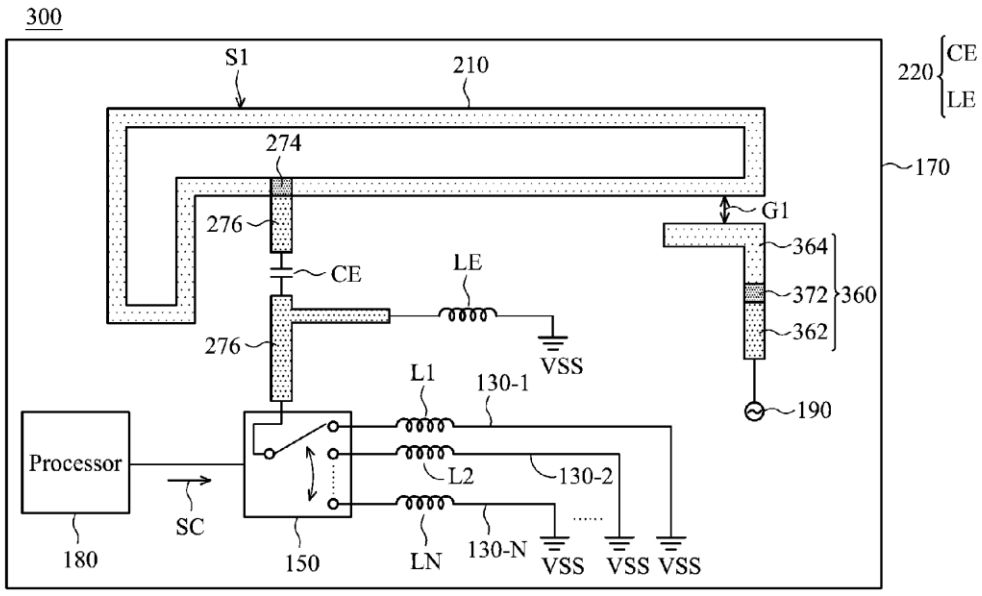

US 20140132453A1

(19) **United States**

(12) **Patent Application Publication**

Yu et al.

(10) **Pub. No.: US 2014/0132453 A1**

(43) **Pub. Date: May 15, 2014**

(54) **MULTI-BAND ANTENNA**

(71) Applicants: **Chung-Ta Yu**, Taipei City (TW); **Shih-Ping Liu**, Taipei City (TW)

(72) Inventors: **Chung-Ta Yu**, Taipei City (TW); **Shih-Ping Liu**, Taipei City (TW)

(21) Appl. No.: **13/721,028**

(22) Filed: **Dec. 20, 2012**

(30) **Foreign Application Priority Data**

Nov. 14, 2012 (TW) 101142420

Publication Classification

(51) **Int. Cl.**
H01Q 11/12 (2006.01)

(52) **U.S. Cl.**
CPC *H01Q 11/12* (2013.01)
USPC ..... **343/700 MS**

(57) **ABSTRACT**

A multi-band antenna suitable for an electronic device is provided. The electronic device has a metal shell. The multi-band antenna includes a ground portion, a radiating portion and a feeding portion. The ground portion has a ground plane. The radiating portion has at least one radiating section and a short-circuit section. An extending direction of the radiating section is parallel to the ground plane. The short-circuit section is electrically connected between the radiating section and the ground plane. The ground portion is adapted to obstruct a path between the metal shell and the radiating section. The feeding portion is electrically connected to the radiating section.

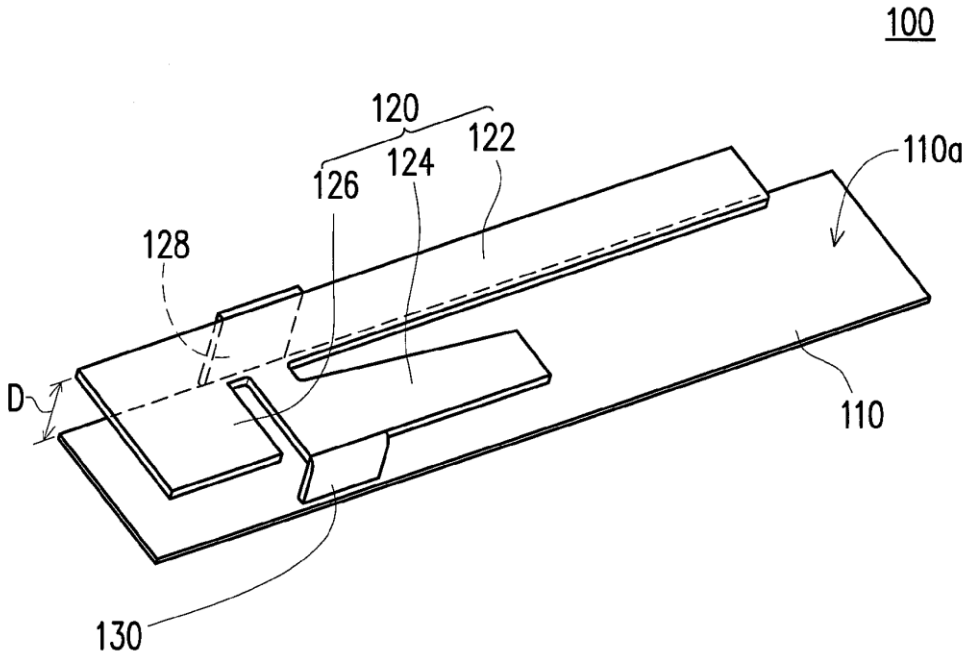

US 20140132454A1

(19) **United States**

(12) **Patent Application Publication**

HONG et al.

(10) **Pub. No.: US 2014/0132454 A1**

(43) **Pub. Date: May 15, 2014**

(54) **ANTENNA PATTERN FRAME, METHOD AND MOLD FOR MANUFACTURING THE SAME, ELECTRONIC DEVICE CASE HAVING ANTENNA PATTERN FRAME EMBEDDED THEREIN, AND METHOD FOR MANUFACTURING THE SAME**

(71) Applicant: **SAMSUNG ELECTRO-MECHANICS CO., LTD.**, Suwon (KR)

(72) Inventors: **Ha Ryong HONG**, Hwaseong (KR); **Jae Suk SUNG**, Yongin (KR); **Nam Il SEO**, Seoul (KR); **Dae Kyu . LEE**, Suwon (KR); **Chan Gwang AN**, Suwon (KR); **Chang Mok HAN**, Chungcheongnam-do (KR); **Tae Sung KIM**, Seoul (KR); **Kyong Keun LEE**, Suwon (KR); **Ki Won CHANG**, Suwon (KR); **Sung Eun CHO**, Suwon (KR)

(73) Assignee: **SAMSUNG ELECTRO-MECHANICS CO., LTD.**, Suwon, Gyunggi-do (KR)

(21) Appl. No.: **14/159,720**

(22) Filed: **Jan. 21, 2014**

Related U.S. Application Data

(63) Continuation of application No. 12/646,381, filed on Dec. 23, 2009, now Pat. No. 8,643,547.

(30) **Foreign Application Priority Data**

Aug. 10, 2009 (KR) 10-2009-0073353

Publication Classification

(51) **Int. Cl.**
H01Q 1/38 (2006.01)

(52) **U.S. Cl.**
CPC ***H01Q 1/38*** (2013.01)
USPC ..... **343/700 MS**

(57) **ABSTRACT**

An antenna pattern frame includes an antenna radiator receiving an external signal and transmitting the received external signal to an electronic device, a radiator frame having the antenna radiator on a surface thereof, and a guide boss protruding from the radiator frame and preventing the radiator frame from moving vertically in a mold for manufacturing an electronic device case having an inner space having a shape corresponding to that of an electronic device case.

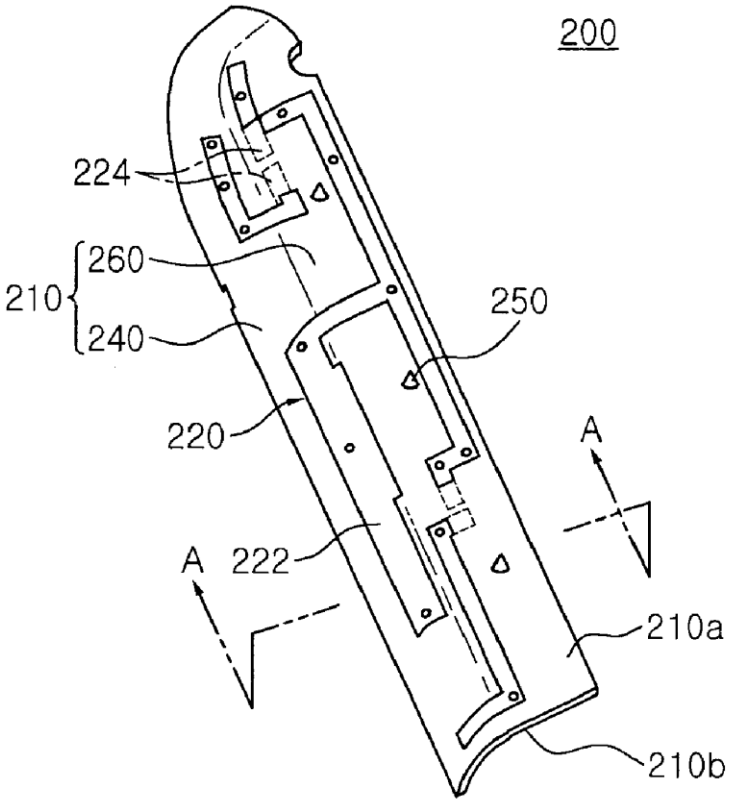

US 20140132457A1

(19) **United States**

(12) **Patent Application Publication**

Galeev

(10) **Pub. No.: US 2014/0132457 A1**

(43) **Pub. Date: May 15, 2014**

(54) **WIRELESS ELECTRONIC DEVICES WITH A METAL PERIMETER INCLUDING A PLURALITY OF ANTENNAS**

(71) Applicant: **SONY MOBILE COMMUNICATIONS AB**, Lund (SE)

(72) Inventor: **Roustem Galeev**, Lund (SE)

(21) Appl. No.: **13/675,023**

(22) Filed: **Nov. 13, 2012**

Publication Classification

(51) **Int. Cl.**
H01Q 1/24 (2006.01)

(52) **U.S. Cl.**
CPC ***H01Q 1/24*** (2013.01)
USPC **343/702**

(57) **ABSTRACT**

Wireless electronic devices may include a ground plane and a metal perimeter around the ground plane. The metal perimeter may include a plurality of antennas and may provide a front surface and/or edge surfaces of the wireless electronic devices.

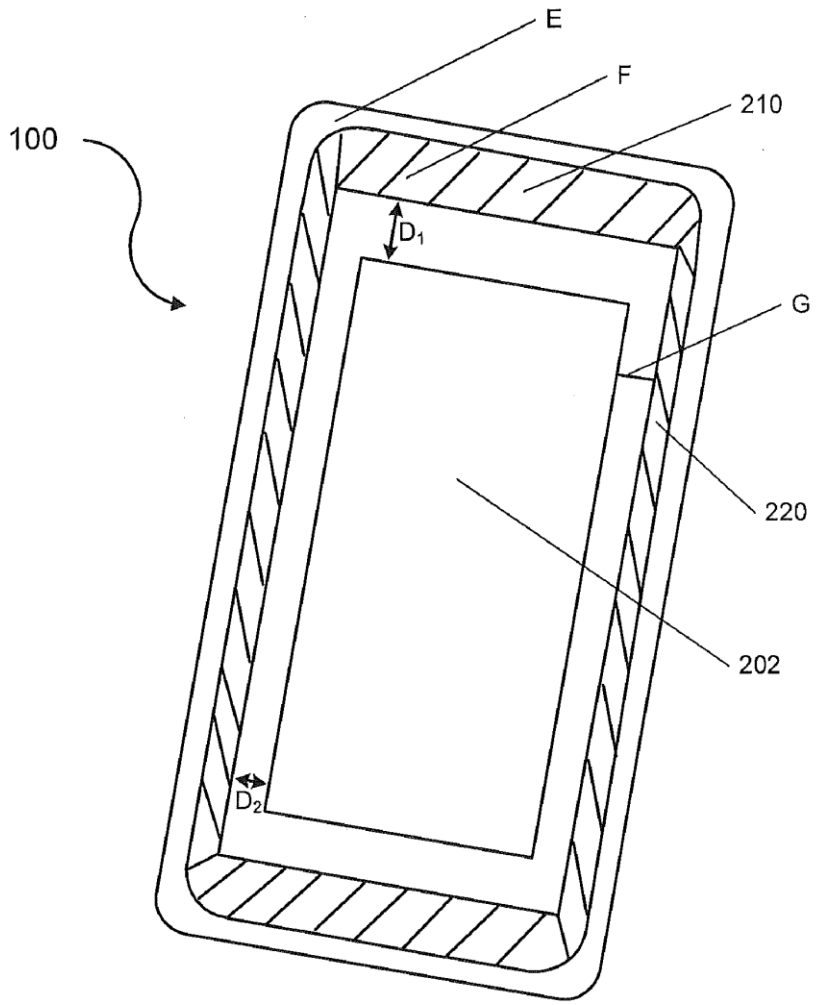

US 20140132459A1

(19) **United States**

(12) **Patent Application Publication**

Hu

(10) **Pub. No.: US 2014/0132459 A1**

(43) **Pub. Date: May 15, 2014**

(54) **ELECTRONIC DEVICE WITH AERIAL GLASS COVER**

(71) Applicant: **CORNING INCORPORATED**, CORNING, NY (US)

(72) Inventor: **Jr-Nan Hu**, New Taipei City (TW)

(73) Assignee: **CORNING INCORPORATED**, CORNING, NY (US)

(21) Appl. No.: **14/049,639**

(22) Filed: **Oct. 9, 2013**

Related U.S. Application Data

(60) Provisional application No. 61/724,465, filed on Nov. 9, 2012.

Publication Classification

(51) **Int. Cl.**

H01Q 1/24 (2006.01)

H01P 11/00 (2006.01)

(52) **U.S. Cl.**

CPC ***H01Q 1/24*** (2013.01); ***H01P 11/001*** (2013.01)

USPC **343/702**; 29/600

(57) **ABSTRACT**

An electronic device includes a housing and a communications disposed in the housing. The communications module is configured to transmit and/or receive radio signals using at least one communications standard. An aerial glass cover is mounted on a side of the housing so as to form a skin covering the side of the housing. The aerial glass cover includes a glass carrier having a surface on which at least one antenna is printed, where the at least one antenna is configured to operate in at least one communications band associated with the at least one communications standard. A transmission line is formed between the communications module and the at least one antenna.

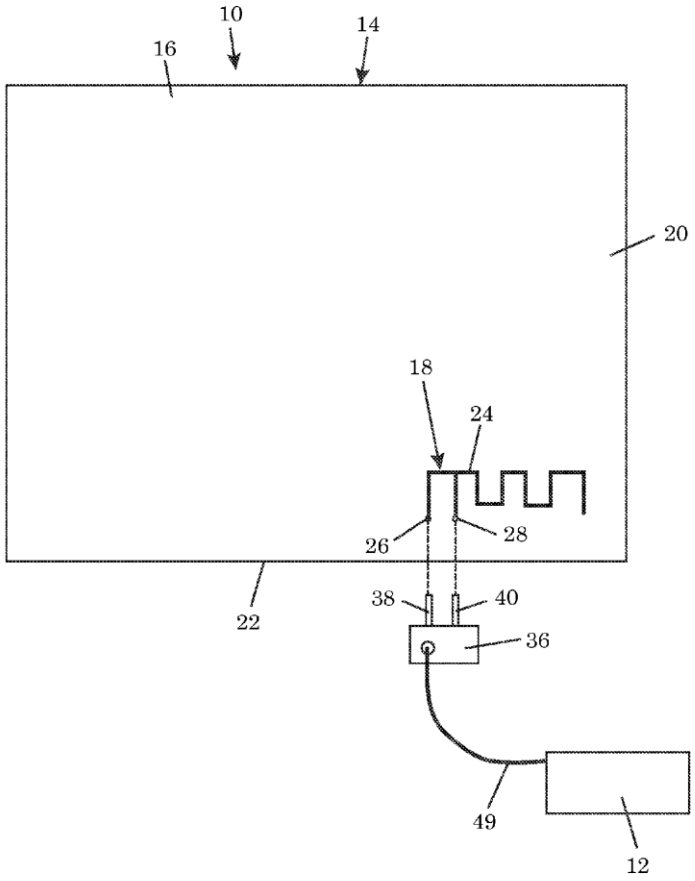

US 20140132460A1

(19) **United States**

(12) **Patent Application Publication**

CHO et al.

(10) **Pub. No.: US 2014/0132460 A1**

(43) **Pub. Date: May 15, 2014**

(54) **ANTENNA APPARATUS FOR PORTABLE TERMINAL**

(71) Applicant: **Samsung Electronics Co., Ltd.**, Suwon-si (KR)

(72) Inventors: **Young-Jun CHO**, Seoul (KR); **Austin KIM**, Seongnam-si (KR); **Se-Hyun PARK**, Suwon-si (KR); **Joon-Ho BYUN**, Yongin-si (KR); **Kyung-Jong LEE**, Hwaseong-si (KR); **Byung-Man LIM**, Seoul (KR)

(73) Assignee: **Samsung Electronics Co., Ltd.**, Suwon-si (KR)

(21) Appl. No.: **14/055,332**

(22) Filed: **Oct. 16, 2013**

(30) **Foreign Application Priority Data**

Nov. 13, 2012 (KR) 10-2012-0128249

Publication Classification

(51) **Int. Cl.**
H01Q 1/24 (2006.01)

(52) **U.S. Cl.**
CPC ***H01Q 1/24*** (2013.01)
USPC **343/702**

(57) **ABSTRACT**

A portable terminal is provided. The portable terminal includes a main housing, a sub housing, a mainboard, and an electric connector. The main housing has a first antenna radiator. The sub housing is separable from the main housing and has a second antenna radiator. The mainboard is disposed in the main housing and processes a radio signal. The electric connector is disposed in the main housing. When the sub housing and the main housing are separated from each other, the electric connector electrically connects the mainboard with the first antenna radiator of the main housing. When the sub housing and the main housing are coupled, the electric connector electrically connects the mainboard with the second antenna radiator of the sub housing.

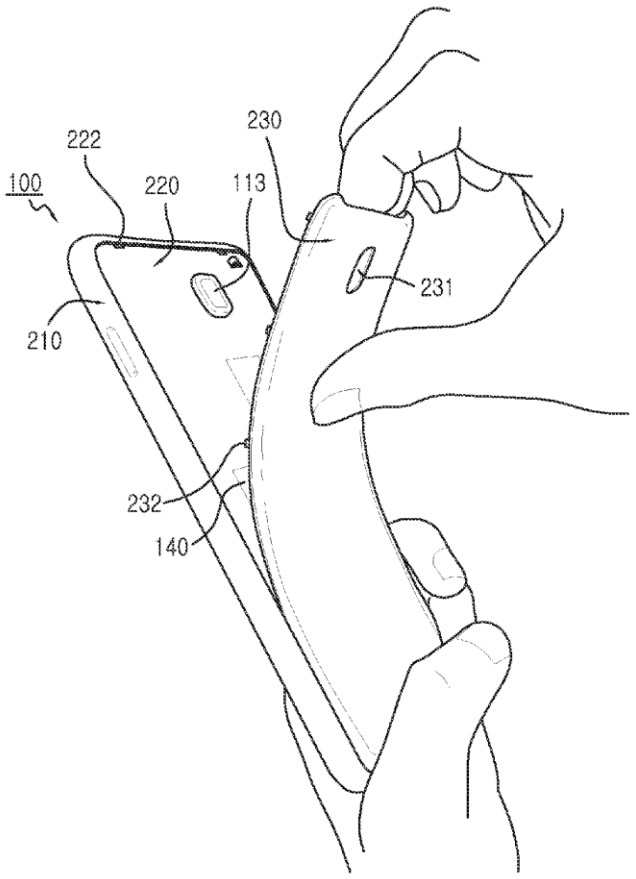

US 20140132462A1

(19) **United States**

(12) **Patent Application Publication**

(10) **Pub. No.: US 2014/0132462 A1**

(43) **Pub. Date: May 15, 2014**

Ying

(54) **MULTI-BAND WIRELESS TERMINALS WITH METAL BACKPLATES AND COUPLING FEED ELEMENTS, AND RELATED MULTI-BAND ANTENNA SYSTEMS**

(75) Inventor: **Zhinong Ying**, Lund (SE)

(73) Assignee: **Sony Ericsson Mobile Communications AB**, Lund (SE)

(21) Appl. No.: **14/127,908**

(22) PCT Filed: **Jul. 18, 2011**

(86) PCT No.: **PCT/IB2011/001661**

§ 371 (c)(1),
(2), (4) Date: **Dec. 19, 2013**

Publication Classification

(51) **Int. Cl.**
H01Q 5/00 (2006.01)

(52) **U.S. Cl.**
CPC ***H01Q 5/0027*** (2013.01)
USPC **343/702**

(57) **ABSTRACT**

An antenna system for use in a portable electronic device may include first and second metal elements. One of the first and second metal elements may be provided by a metal backplate of a housing of the portable electronic device. The antenna system may additionally include a coupling feed element between the first and second metal elements of the portable electronic device.

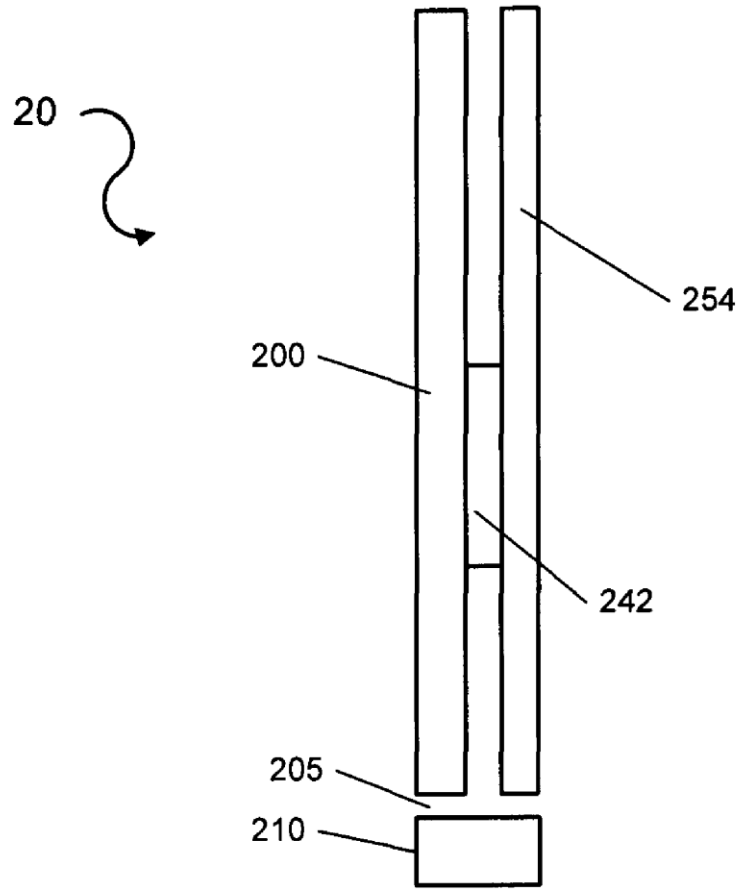

US 20140132463A1

(19) **United States**

(12) **Patent Application Publication**

Hobson et al.

(10) **Pub. No.: US 2014/0132463 A1**

(43) **Pub. Date: May 15, 2014**

(54) **HANDHELD ELECTRONIC DEVICE WITH CABLE GROUNDING**

(71) Applicant: **Apple Inc.**, Cupertino, CA (US)

(72) Inventors: **Phillip Michael Hobson**, Menlo Park, CA (US); **Erik L. Wang**, Redwood City, CA (US); **Kenneth A. Jenks**, Capitola, CA (US); **Robert J. Hill**, Salinas, CA (US); **Robert W. Schlub**, Cupertino, CA (US); **Richard H. Dinh**, San Jose, CA (US); **Tang Yew Tan**, Palo Alto, CA (US); **Adam D. Mittleman**, San Francisco, CA (US); **Bartley K. Andre**, Palo Alto, CA (US); **Daniel J. Coster**, San Francisco, CA (US); **Daniele De Iullis**, San Francisco, CA (US); **Richard P. Howarth**, San Francisco, CA (US); **Jonathan P. Ive**, San Francisco, CA (US); **Steve Jobs**, Palo Alto, CA (US); **Ducan Robert Kerr**, San Francisco, CA (US); **Shin Nishibori**, Kailua, HI (US); **Matthew Dean Rohrbach**, San Francisco, CA (US); **Douglas B. Satzger**, San Francisco, CA (US); **Calvin Q. Seid**, Palo Alto, CA (US); **Christopher J. Stringer**, Woodside, CA (US); **Eugene Antony Whang**, San Francisco, CA (US); **Rico Zorkendorfer**, San Francisco, CA (US)

(73) Assignee: **Apple Inc.**, Cupertino, CA (US)

(21) Appl. No.: **14/158,403**

(22) Filed: **Jan. 17, 2014**

Related U.S. Application Data

(63) Continuation of application No. 13/021,689, filed on Feb. 4, 2011, now Pat. No. 8,681,056, which is a continuation of application No. 11/821,329, filed on Jun. 21, 2007, now Pat. No. 7,889,139.

Publication Classification

(51) **Int. Cl.**

H01Q 1/24 (2006.01)

H05K 5/02 (2006.01)

(52) **U.S. Cl.**

CPC ***H01Q 1/243*** (2013.01); ***H05K 5/0247*** (2013.01)

USPC **343/702**; 174/51

(57) **ABSTRACT**

A handheld electronic device may be provided that contains a conductive housing and other conductive elements. The conductive elements may form an antenna ground plane. One or more antennas for the handheld electronic device may be formed from the ground plane and one or more associated antenna resonating elements. Transceiver circuitry may be connected to the resonating elements by transmission lines such as coaxial cables. Ferrules may be crimped to the coaxial cables. A bracket with extending members may be crimped over the ferrules to ground the coaxial cables to the housing and other conductive elements in the ground plane. The ground plane may contain an antenna slot. A dock connector and flex circuit may overlap the slot in a way that does not affect the resonant frequency of the slot. Electrical components may be isolated from the antenna using isolation elements such as inductors and resistors.

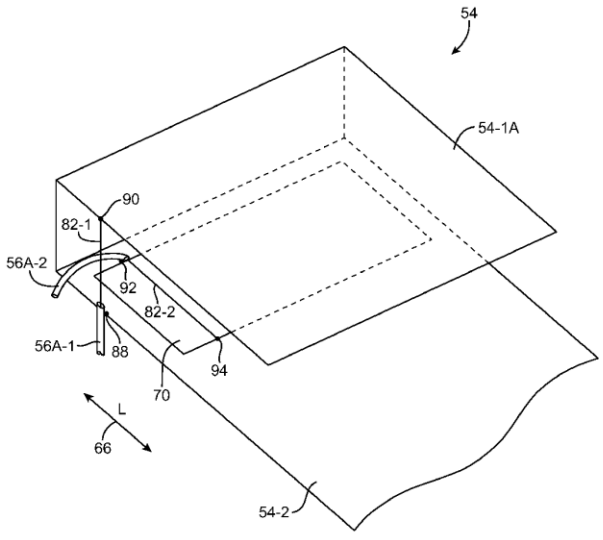

US 20140132465A1

(19) **United States**

(12) **Patent Application Publication**

Sanchez et al.

(10) **Pub. No.: US 2014/0132465 A1**

(43) **Pub. Date: May 15, 2014**

(54) **TUNABLE DUAL LOOP ANTENNA SYSTEM**

(71) Applicant: **Futurewei Technologies, Inc.**, Plano, TX (US)

(72) Inventors: **Jorge Fabrega Sanchez**, San Diego, CA (US); **Kiran Vanjani**, San Diego, CA (US)

(21) Appl. No.: **13/907,120**

(22) Filed: **May 31, 2013**

Related U.S. Application Data

(63) Continuation-in-part of application No. 13/673,862, filed on Nov. 9, 2012.

(60) Provisional application No. 61/780,081, filed on Mar. 13, 2013.

Publication Classification

(51) **Int. Cl.**
H01Q 1/50 (2006.01)

(52) **U.S. Cl.**
CPC ***H01Q 1/50*** (2013.01)
USPC **343/748**; 343/745

(57) **ABSTRACT**

An apparatus comprising a first antenna, a second antenna, wherein the first antenna and the second antenna comprise a common conductor, a variable load connected between the common conductor and a ground connection, wherein an impedance of the variable load is variable, and wherein an operating frequency of the first antenna and the second antenna depends on the impedance, and a selection switch coupled to the first antenna and the second antenna, wherein the selection switch is configured to activate the first antenna and deactivate the second antenna in a first state, and wherein the selection switch is configured to activate the second antenna and deactivate the first antenna in a second state.

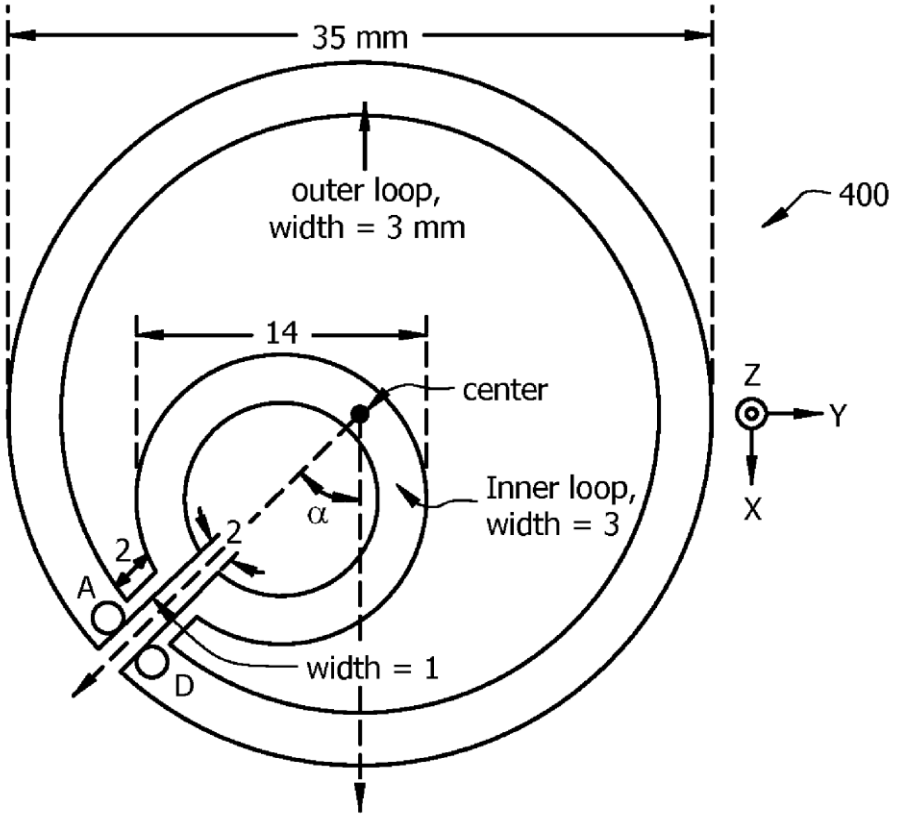

US 20140132467A1

(19) **United States**

(12) **Patent Application Publication**

PARK et al.

(10) **Pub. No.: US 2014/0132467 A1**

(43) **Pub. Date: May 15, 2014**

(54) **ANTENNA USING SLOT IN MOBILE TERMINAL**

(71) Applicant: **Samsung Electronics Co., Ltd.**, Gyeonggi-do (KR)

(72) Inventors: **Hoon PARK**, Seoul (KR); **Yongsoo Kwak**, Gyeonggi-do (KR); **Hosaeng Kim**, Gyeonggi-do (KR); **Joonho Byun**, Gyeonggi-do (KR); **Sangjin Eom**, Gyeonggi-do (KR); **Seongtae Jeong**, Gyeonggi-do (KR)

(73) Assignee: **Samsung Electronics Co., Ltd.**, Gyeonggi-do (KR)

(21) Appl. No.: **14/073,419**

(22) Filed: **Nov. 6, 2013**

(30) **Foreign Application Priority Data**

Nov. 9, 2012 (KR) 10-2012-0126658

Publication Classification

(51) **Int. Cl.**
H01Q 1/52 (2006.01)

(52) **U.S. Cl.**
CPC ***H01Q 1/52*** (2013.01)
USPC **343/767**; 343/770

(57) **ABSTRACT**

An antenna using a slot formed by assembling a mobile terminal case and a metal structure (e.g., a bracket), is disclosed. The antenna reduces deterioration of antenna performance resulting from frequency interference or electromagnetic interference. The antenna can be used in various frequency bands.

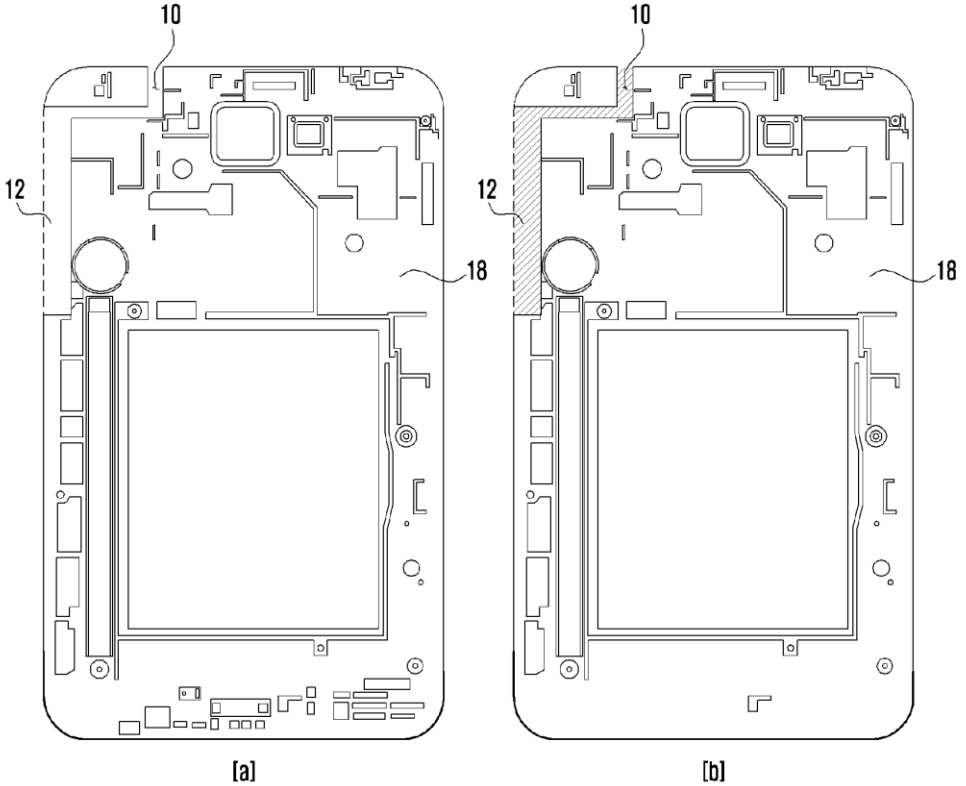

US 20140132468A1

(19) **United States**

(12) **Patent Application Publication**

KIM et al.

(10) **Pub. No.: US 2014/0132468 A1**

(43) **Pub. Date: May 15, 2014**

(54) **DIPOLE ANTENNA MODULE AND ELECTRONIC APPARATUS INCLUDING THE SAME**

(71) Applicant: **Samsung Electronics Co., Ltd.**, Suwon-si (KR)

(72) Inventors: **Tae-young KIM**, Suwon-si (KR); **Chee-hwan YANG**, Yongin-si (KR); **In-young LEE**, Hwaseong-si (KR); **Sang-hoon CHOI**, Suwon-si (KR)

(73) Assignee: **Samsung Electronics Co., Ltd.**, Suwon-si (KR)

(21) Appl. No.: **13/928,524**

(22) Filed: **Jun. 27, 2013**

Related U.S. Application Data

(60) Provisional application No. 61/726,674, filed on Nov. 15, 2012.

(30) **Foreign Application Priority Data**

Jan. 8, 2013 (KR) 10-2013-0002155

Publication Classification

(51) **Int. Cl.**
H01Q 9/28 (2006.01)

(52) **U.S. Cl.**
CPC ***H01Q 9/285*** (2013.01)
USPC **343/793**

(57) **ABSTRACT**

A dipole antenna module and an electronic apparatus include an antenna element, a power feeder formed at an end of the antenna element and connected to a circuit board to process an antenna signal through a cable, and a ground part to ground a ground of the cable such that the ground part keeps a preset gap from the antenna element and is grounded to a conductor of the circuit board.

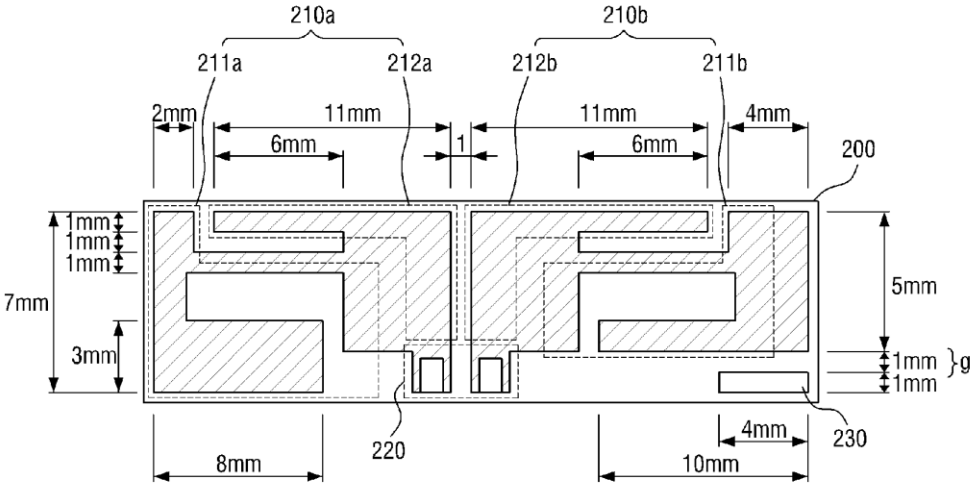

US 20140132469A1

(19) **United States**

(12) **Patent Application Publication**

Wang et al.

(10) **Pub. No.: US 2014/0132469 A1**

(43) **Pub. Date: May 15, 2014**

(54) **DIPOLE ANTENNA AND RADIO-FREQUENCY DEVICE**

(71) Applicant: **WISTRON NEWEB CORPORATION**, Hsinchu (TW)

(72) Inventors: **Chih-Ming Wang**, Hsinchu (TW); **Kuan-Chung Chen**, Hsinchu (TW); **Yu-Yu Chiang**, Hsinchu (TW)

(73) Assignee: **Wistron NeWeb Corporation**, Hsinchu (TW)

(21) Appl. No.: **13/748,613**

(22) Filed: **Jan. 24, 2013**

(30) **Foreign Application Priority Data**

Nov. 9, 2012 (TW) 101141711

Publication Classification

(51) **Int. Cl.**
H01Q 9/16 (2006.01)

(52) **U.S. Cl.**
CPC ***H01Q 9/16*** (2013.01)
USPC **343/821**

(57) **ABSTRACT**

A dipole antenna is disclosed. The dipole antenna includes a feed-in terminal, a balun, a first radiator and a second radiator. The feed-in terminal is used for feeding in a radio-frequency signal. The balun is electrically connected to the feed-in terminal for driving out a return current of the dipole antenna to balance a feed-in impedance of the dipole antenna. The first radiator is electrically connected to the feed-in terminal and the balun for radiating the radio-frequency signal in a first frequency band. The second radiator is electrically connected to the first radiator, the feed-in terminal and the balun for radiating the radio-frequency signal in a second frequency band.

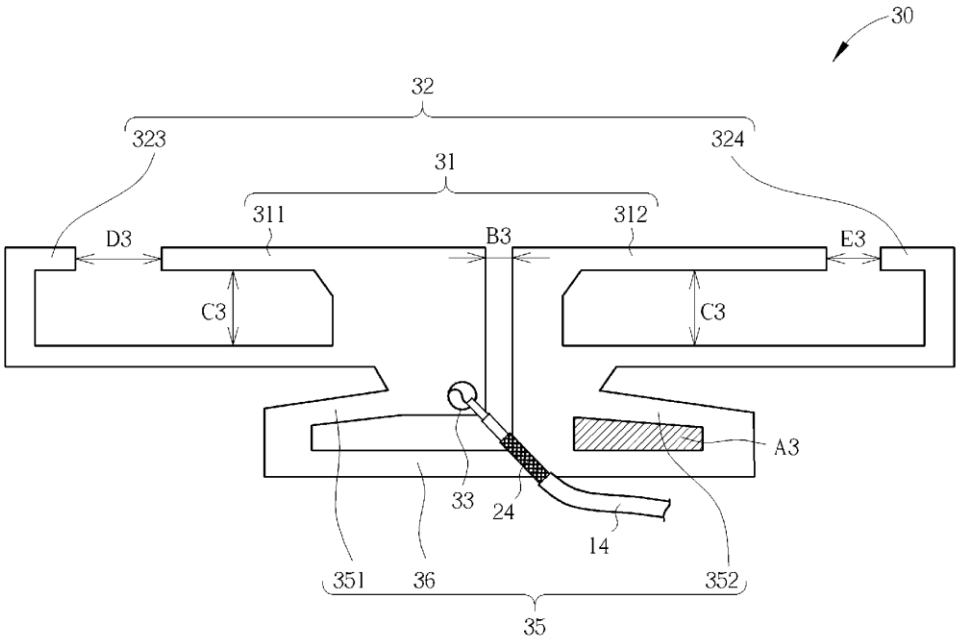

US 20140132471A1

(19) **United States**

(12) **Patent Application Publication**

Tayama et al.

(10) **Pub. No.: US 2014/0132471 A1**

(43) **Pub. Date: May 15, 2014**

(54) **ANTENNA DEVICE AND ANTENNA MOUNTING METHOD**

(71) Applicant: **FUJIKURA LTD.**, Tokyo (JP)

(72) Inventors: **Hiroiku Tayama**, Sakura-shi (JP); **Ning Guan**, Sakura-shi (JP)

(73) Assignee: **FUJIKURA LTD.**, Tokyo (JP)

(21) Appl. No.: **14/158,312**

(22) Filed: **Jan. 17, 2014**

Related U.S. Application Data

(63) Continuation of application No. PCT/JP2012/071366, filed on Aug. 23, 2012.

(30) **Foreign Application Priority Data**

Sep. 26, 2011 (JP) 2011-209640

Publication Classification

(51) **Int. Cl.**

H01Q 1/48 (2006.01)

H01Q 1/22 (2006.01)

(52) **U.S. Cl.**

CPC ... ***H01Q 1/48*** (2013.01); ***H01Q 1/22*** (2013.01)

USPC **343/848**; 29/601

(57) **ABSTRACT**

An antenna device (**10**) includes: an antenna (**100**) including a radiating element (**101**) and an internal ground (**103**); a coaxial cable (**200**) whose internal conductor (**204**) is connected with the radiating element (**101**) and whose external conductor (**203**) is connected with the internal ground (**103**); and an external ground (**500**) connected with the external conductor (**203**) of the coaxial cable (**200**).

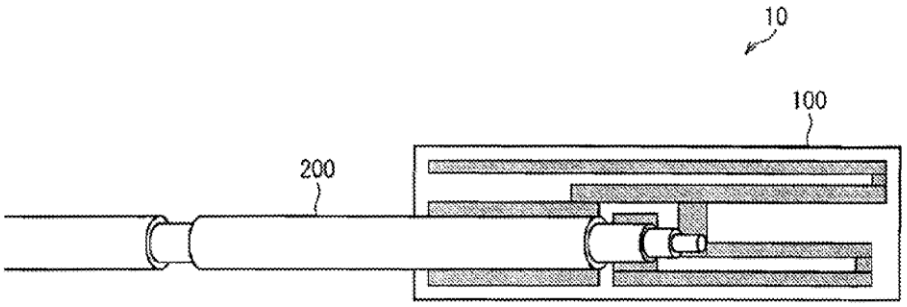

US 20140132478A1

(19) **United States**

(12) **Patent Application Publication**

Wang et al.

(10) **Pub. No.: US 2014/0132478 A1**

(43) **Pub. Date: May 15, 2014**

(54) **DIVERSITY ANTENNA MODULE AND ASSOCIATED METHOD FOR A USER EQUIPMENT (UE) DEVICE**

(75) Inventors: **Dong Wang**, Waterloo (CA); **Qinjiang Rao**, Kanata (CA); **James Warden**, Ft. Worth, TX (US)

(73) Assignee: **BLACKBERRY LIMITED**, Waterloo, ON (CA)

(21) Appl. No.: **14/232,339**

(22) PCT Filed: **Jul. 15, 2011**

(86) PCT No.: **PCT/US2011/044117**

§ 371 (c)(1),
(2), (4) Date: **Jan. 13, 2014**

Publication Classification

(51) **Int. Cl.**
H01Q 21/30 (2006.01)
H01Q 21/00 (2006.01)

(52) **U.S. Cl.**
CPC ***H01Q 21/30*** (2013.01); ***H01Q 21/0087*** (2013.01)
USPC **343/893**; 29/600

(57) **ABSTRACT**

A diversity antenna module comprising a first radiating element adapted to operate with a first transceiver circuit operating in at least one band and a second radiating element adapted to operate with a second transceiver circuit operating in at least one band. The first radiating element is disposed along a first side of a substrate and the second radiating element is disposed along a second side of the substrate, wherein the first and second sides are substantially perpendicular to each other, the first and second radiating elements being spatially dispersed from each another by a distance.

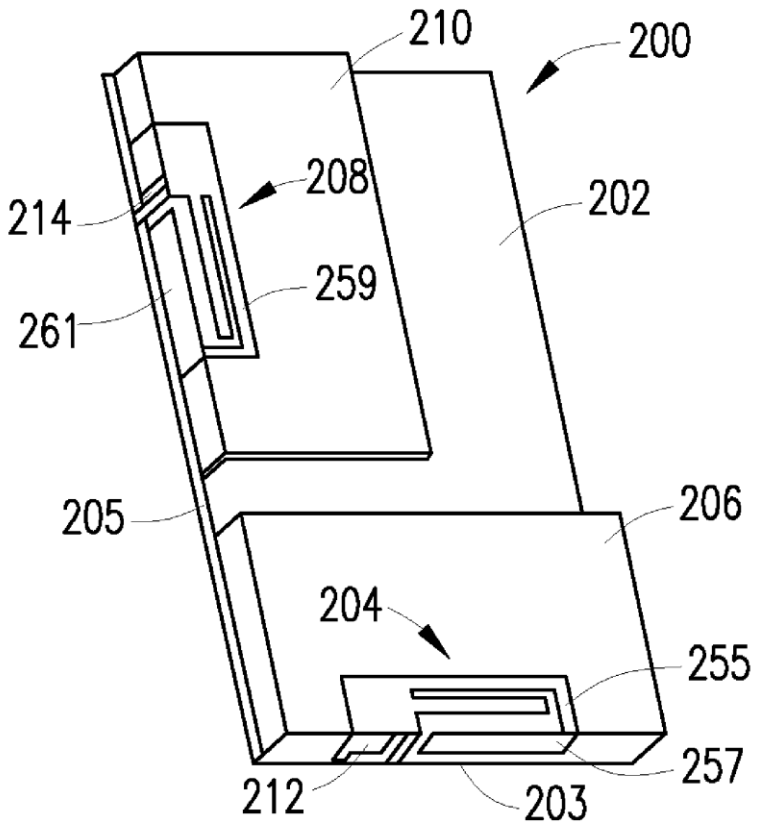

US 20140135060A1

(19) **United States**

(12) **Patent Application Publication**

Mercer

(10) **Pub. No.: US 2014/0135060 A1**

(43) **Pub. Date: May 15, 2014**

(54) **ANTENNA PLACEMENT**

(71) Applicant: **Microsoft Corporation**, Redmond, WA (US)

(72) Inventor: **Sean Russell Mercer**, Issaquah, WA (US)

(21) Appl. No.: **14/160,421**

(22) Filed: **Jan. 21, 2014**

Related U.S. Application Data

(63) Continuation of application No. 13/656,520, filed on Oct. 19, 2012, now Pat. No. 8,654,030.

(60) Provisional application No. 61/714,713, filed on Oct. 16, 2012.

Publication Classification

(51) **Int. Cl.**

H04B 1/38 (2006.01)

H04W 88/06 (2006.01)

(52) **U.S. Cl.**

CPC ***H04B 1/3833*** (2013.01); ***H04W 88/06*** (2013.01)

USPC **455/552.1**

(57) **ABSTRACT**

Antenna placement techniques are described. In one or more embodiments, a computing device includes an antenna suite having multiple different kinds of antennas. An antenna zone for the antenna suite may be established along a particular edge of the computing device. Non-interfering materials (e.g., RF transparent material) may be used within the antenna zone and other materials (e.g., metal) may be employed for other regions of the device. The multiple different kinds of antennas in the antenna suite may then be disposed within the established antenna zone. The antennas may be placed to minimize interference between antennas and/or achieve performance objective for the suite of antennas. In one approach, a suite of five antennas may be placed along a top edge of a computing device in a landscape orientation.

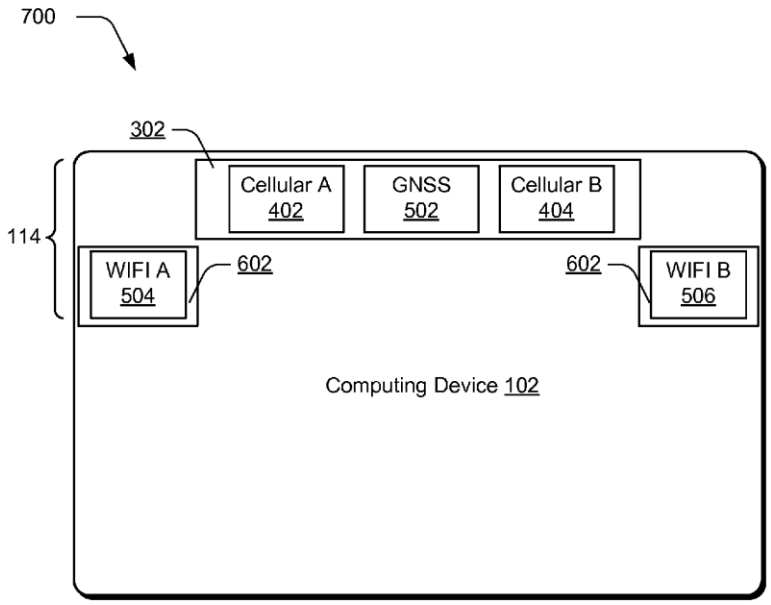

US 20140135064A1

(19) United States

(12) Patent Application Publication

(10) Pub. No.: US 2014/0135064 A1

(43) Pub. Date: May 15, 2014

Huang et al.

(54) **MULTI-ANTENNA MOBILE PHONE DATA CARD AND METHOD FOR REDUCING SPECIFIC ABSORPTION RATE**

(75) Inventors: **Pan Huang**, Shenzhen (CN); **Lu Zhang**, Shenzhen (CN); **Hui Jiang**, Shenzhen (CN)

(73) Assignee: **ZTE CORPORATION**, Shenzhen, Guangdong (CN)

(21) Appl. No.: **14/129,444**

(22) PCT Filed: **Nov. 16, 2011**

(86) PCT No.: **PCT/CN2011/082283**

§ 371 (c)(1),
(2), (4) Date: **Dec. 26, 2013**

(30) **Foreign Application Priority Data**

Aug. 16, 2011 (CN) 201110234209.0

Publication Classification

(51) **Int. Cl.**
H04M 1/725 (2006.01)

(52) **U.S. Cl.**
CPC ***H04M 1/72527*** (2013.01)
USPC **455/558**

(57) **ABSTRACT**

The present disclosure provides a multi-antenna mobile phone data card and method for reducing a specific absorption rate, where the data card includes: a radio frequency (RF) substrate, antennas configured to transmit and receive signals, and a feed source, connected between the RF substrate and the antennas, configured to excite the antennas, the RF substrate has a rectangular shape, and the feed source is arranged at a first corner of the RF substrate, a first hollow portion is arranged at a second corner which is adjacent to the first corner and is located on a short side of the RF substrate on which the first corner is located, the first hollow portion is provided with a first metal strip, the first metal strip has an end connected with the short side, and another end as a free end, a first electrical length formed from the feed source to the free end of the first metal strip is equal to a second electrical length formed from the feed source to another short side along a long side on which the first corner is located. According to the present disclosure, through the method of changing the shape of the RF substrate, the same electrical lengths is obtained from the feed source respectively to several edge points on the RF substrate, and thus reducing the current peak and the SAR value on the RF substrate and saving the structure space, thereby reducing the radiation hazard of the data card to the human body.

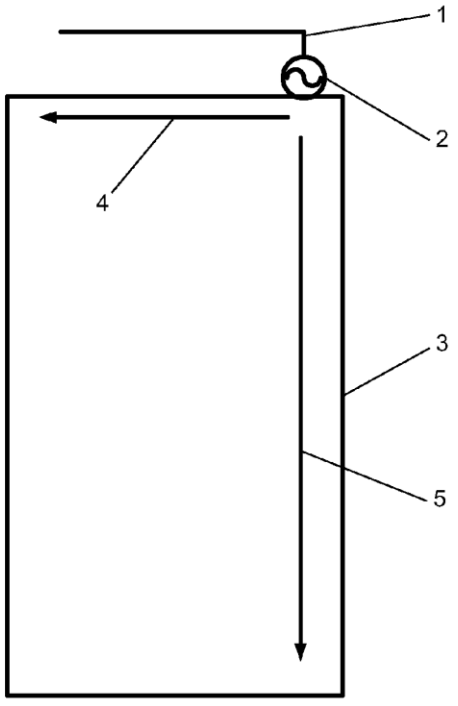

US 20140139376A1

(19) **United States**

(12) **Patent Application Publication**

Liu et al.

(10) **Pub. No.: US 2014/0139376 A1**

(43) **Pub. Date: May 22, 2014**

(54) **OPEN-LOOP GPS ANTENNA**

(71) Applicant: **ASKEY COMPUTER CORP.**, New Taipei City (TW)

(72) Inventors: **Chien-Sheng Liu**, Chiayi County (TW); **Yu-Chien Chan**, New Taipei City (TW); **Kuo-Chao Lo**, Taoyuan County (TW); **Tzu-Hsuan Chou**, Hsinchu County (TW)

(73) Assignee: **ASKEY COMPUTER CORP.**, New Taipei City (TW)

(21) Appl. No.: **13/858,110**

(22) Filed: **Apr. 8, 2013**

(30) **Foreign Application Priority Data**

Nov. 21, 2012 (TW) 101143486

Publication Classification

(51) **Int. Cl.**
H01Q 9/04 (2006.01)

(52) **U.S. Cl.**
CPC ***H01Q 9/04*** (2013.01)
USPC ..... **343/700 MS**

(57) **ABSTRACT**

An open-loop GPS antenna configured on an insulation object is provided. The open-loop GPS antenna includes a feed, a high frequency circuit, a low frequency circuit and a ground. The high frequency circuit includes a first end, connected to the feed, and a second end. The low frequency circuit includes a third end and a fourth end. The third end is disposed parallel to the second end so as to couple to the second end and generate a capacitance effect to transmit a signal. The fourth end is connected to the ground.

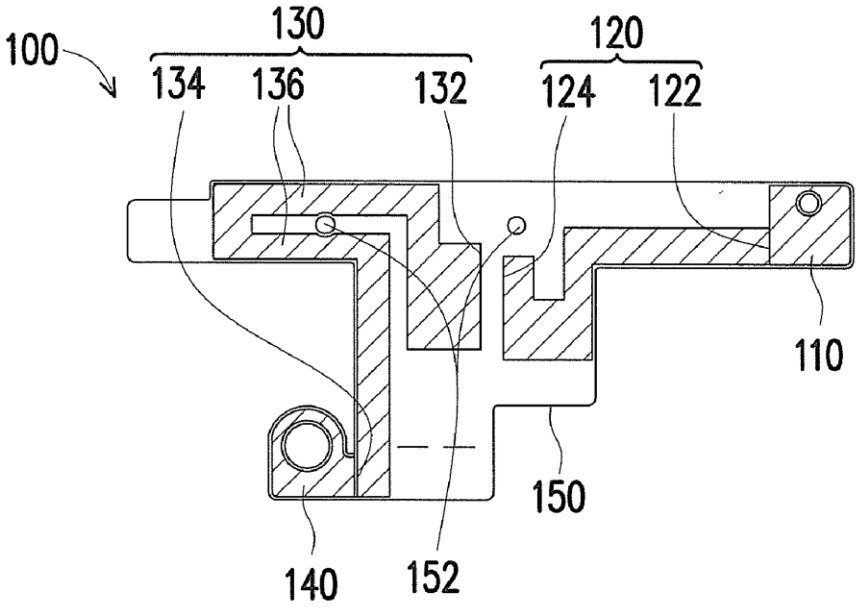

US 20140139377A1

(19) **United States**

(12) **Patent Application Publication**

RUAN et al.

(10) **Pub. No.: US 2014/0139377 A1**

(43) **Pub. Date: May 22, 2014**

(54) **BROADBAND ANTENNA AND WIRELESS COMMUNICATION DEVICE INCLUDING THE SAME**

(71) Applicant: **Wistron NeWeb Corp.**, Hsinchu County (TW)

(72) Inventors: **Wei-Hung RUAN**, Hsinchu County (TW); **Wen-Chuan FAN**, Hsinchu County (TW)

(21) Appl. No.: **13/904,594**

(22) Filed: **May 29, 2013**

(30) **Foreign Application Priority Data**

Nov. 20, 2012 (TW) 101143248

Publication Classification

(51) **Int. Cl.**
H01Q 9/04 (2006.01)

(52) **U.S. Cl.**
CPC ***H01Q 9/04*** (2013.01)
USPC ..... **343/700 MS**

(57) **ABSTRACT**

A broadband antenna includes first and second radiating conductors. The first radiating conductor includes a short-circuit portion in a serpentine shape, a first radiating arm resonating in a first frequency band, and a second radiating arm. The second radiating conductor includes a feed-in portion coupling with the first radiating arm, a third radiating arm resonating in a second frequency band, and a fourth radiating arm. At least a part of the third radiating arm is in a serpentine shape, couples with the first radiating arm, and resonates in a third frequency band with the short-circuit portion and the second radiating arm. The fourth radiating arm resonates in a fourth frequency band.

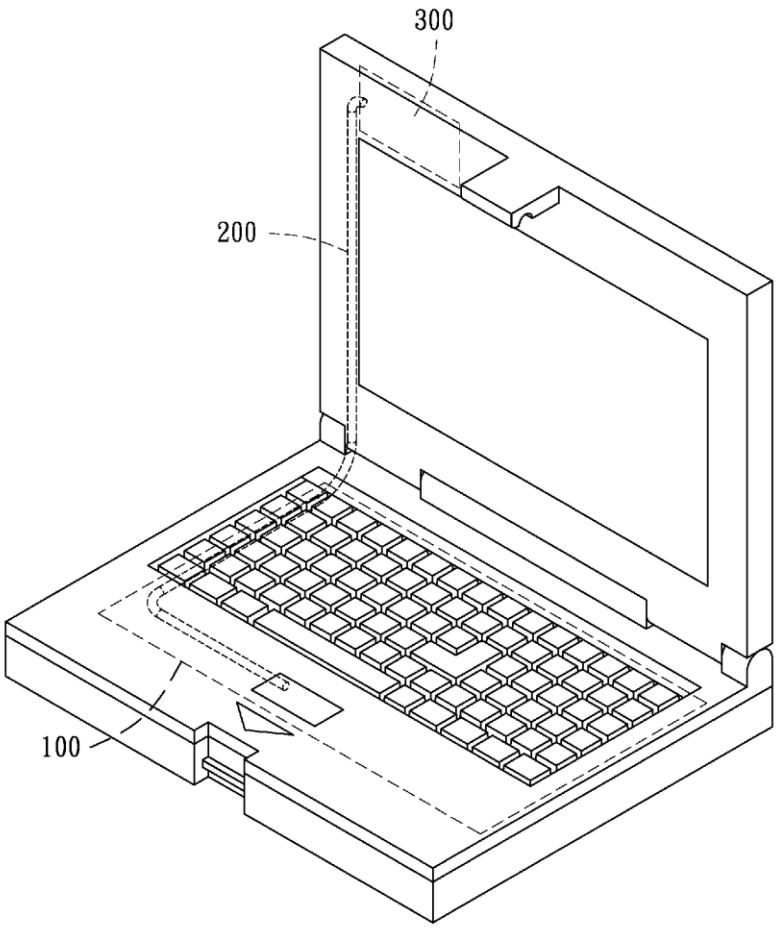

US 20140139378A1

(19) **United States**

(12) **Patent Application Publication**

HUANG et al.

(10) **Pub. No.: US 2014/0139378 A1**

(43) **Pub. Date: May 22, 2014**

(54) **MONOPOLE ANTENNA**

(71) Applicant: **ARCADYAN TECHNOLOGY CORPORATION**, Hsinchu City (TW)

(72) Inventors: **CHIH-YUNG HUANG**, Taichung County (TW); **KUO-CHANG LO**, Miaoli County (TW)

(73) Assignee: **ARCADYAN TECHNOLOGY CORPORATION**, Hsinchu City (TW)

(21) Appl. No.: **14/081,133**

(22) Filed: **Nov. 15, 2013**

(30) **Foreign Application Priority Data**

Nov. 20, 2012 (TW) 101143278

Publication Classification

(51) **Int. Cl.**
H01Q 1/38 (2006.01)

(52) **U.S. Cl.**
CPC ***H01Q 1/38*** (2013.01)
USPC ..... **343/700 MS**

(57) **ABSTRACT**

The monopole antenna comprises an antenna body comprising a first radiation portion and a second radiation portion comprising a feed-in terminal, wherein the first radiation portion has a length and a width extending respectively in a first direction and a second direction, the first direction is perpendicular to the second direction, and the first radiation portion is connected to the second radiation portion in the first direction; a dielectric part, coupled to the antenna body; and a ground part, coupled to the dielectric part for enabling the dielectric part to isolate the antenna body from the ground part; wherein the length of the first radiation portion is adjusted to adjust operation frequency of the antenna body, the width of the first radiation portion is adjusted to adjust operation bandwidth of the antenna body, and size of the second radiation part is adjusted to adjust impedance matching of the antenna body.

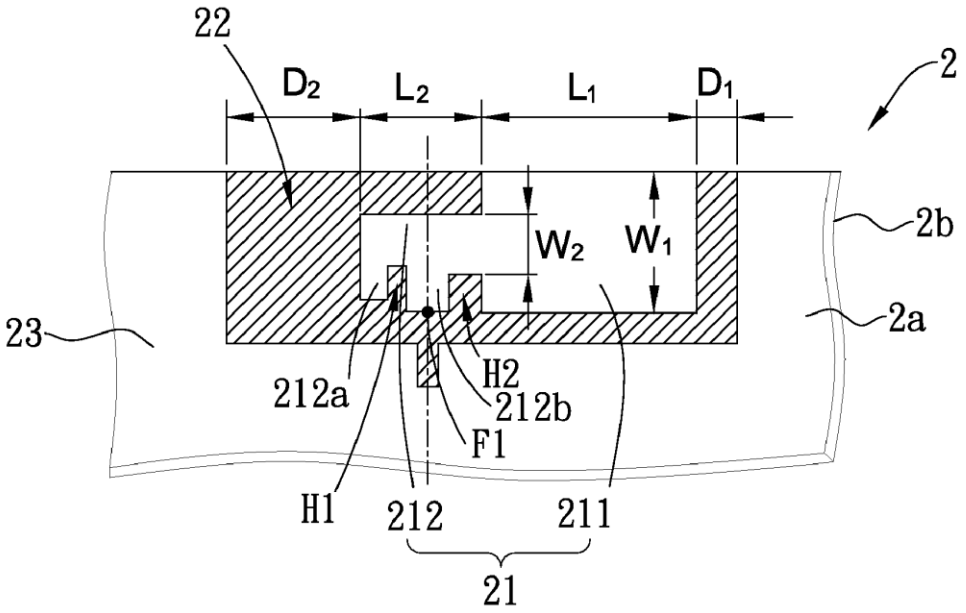

US 20140139379A1

(19) **United States**

(12) **Patent Application Publication**

Bolin et al.

(10) **Pub. No.: US 2014/0139379 A1**

(43) **Pub. Date: May 22, 2014**

(54) **TRANSPARENT ANTENNAS FOR WIRELESS TERMINALS**

(71) Applicant: **SONY MOBILE COMMUNICATIONS AB**, Lund (SE)

(72) Inventors: **Thomas Bolin**, Lund (SE); **Henrik Jensfelt**, Lund (SE); **Zhinong Ying**, Lund (SE)

(21) Appl. No.: **13/679,527**

(22) Filed: **Nov. 16, 2012**

Publication Classification

(51) **Int. Cl.**

H01Q 1/24 (2006.01)

H01Q 9/06 (2006.01)

(52) **U.S. Cl.**

CPC . ***H01Q 1/243*** (2013.01); ***H01Q 9/06*** (2013.01)

USPC ..... **343/702**; 343/700 MS

(57) **ABSTRACT**

Transparent antennas are described. An antenna apparatus for a radio transceiver of a wireless communication terminal having a housing includes a transparent antenna coupled to the housing around a perimeter of the housing and electrically connected to the transceiver. The transparent antenna has a conductive mesh acting as one or more radiating elements. Light and images may pass through the transparent antenna. The transparent antenna may have a ring shape around the housing of the terminal.

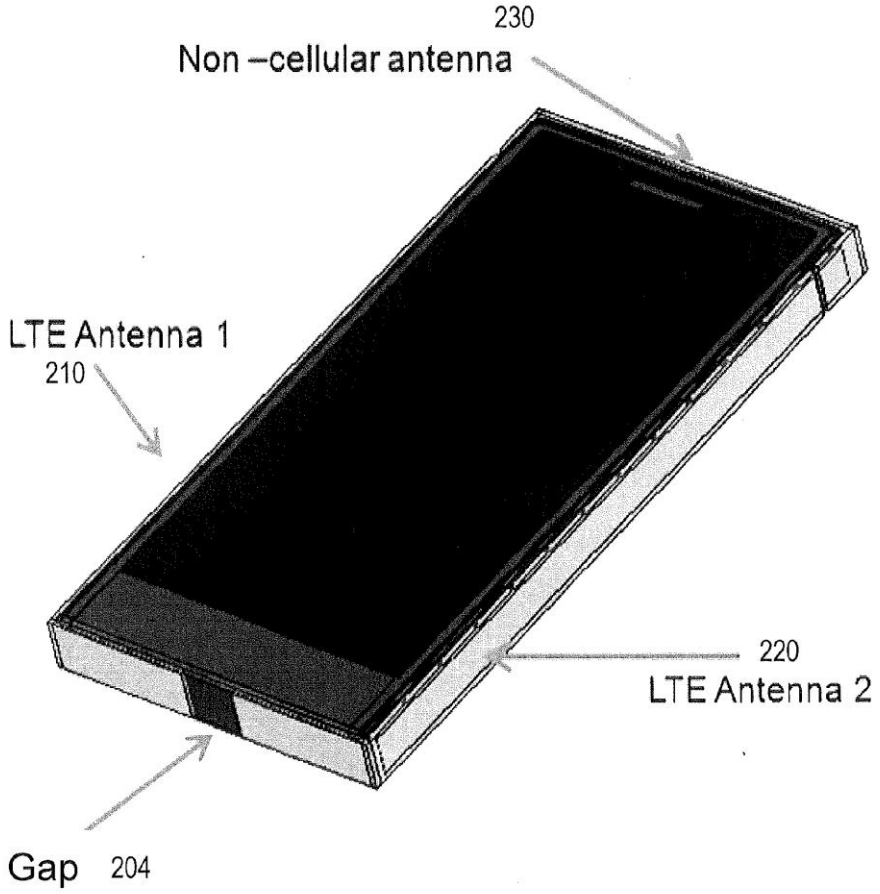

US 20140139380A1

(19) **United States**

(12) **Patent Application Publication**

Ouyang et al.

(10) **Pub. No.: US 2014/0139380 A1**

(43) **Pub. Date: May 22, 2014**

(54) **SHARED ANTENNA STRUCTURES FOR NEAR-FIELD COMMUNICATIONS AND NON-NEAR-FIELD COMMUNICATIONS CIRCUITRY**

(71) Applicant: **APPLE INC.**, Cupertino, CA (US)

(72) Inventors: **Yuehui Ouyang**, Sunnyvale, CA (US); **Robert W. Schlub**, Cupertino, CA (US); **Nanbo Jin**, Sunnyvale, CA (US); **Mattia Pascolini**, San Mateo, CA (US)

(73) Assignee: **Apple Inc.**, Cupertino, CA (US)

(21) Appl. No.: **13/681,138**

(22) Filed: **Nov. 19, 2012**

Publication Classification

(51) **Int. Cl.**

H01Q 21/30 (2006.01)

H01Q 1/24 (2006.01)

(52) **U.S. Cl.**

CPC ***H01Q 21/30*** (2013.01); ***H01Q 1/243*** (2013.01)

USPC **343/702**; 343/729

(57) **ABSTRACT**

Electronic devices may be provided that contain wireless communications circuitry. The wireless communications circuitry may include radio-frequency transceiver circuitry and antenna structures. The antenna structures may include conductive housing structures such as a peripheral conductive housing member. The antenna structures may be based on an inverted-F antenna resonating element or other types of antenna resonating element. An electronic device may have near field communications circuitry and non-near-field communications circuitry such as cellular telephone, satellite navigation system, or wireless local area network transceiver circuitry. Antenna structures may be configured to handle signals associated with the non-near-field communications circuitry. The antenna structures may also have portions that form a near field communications loop antenna for handling signals associated with the near field communications circuitry.

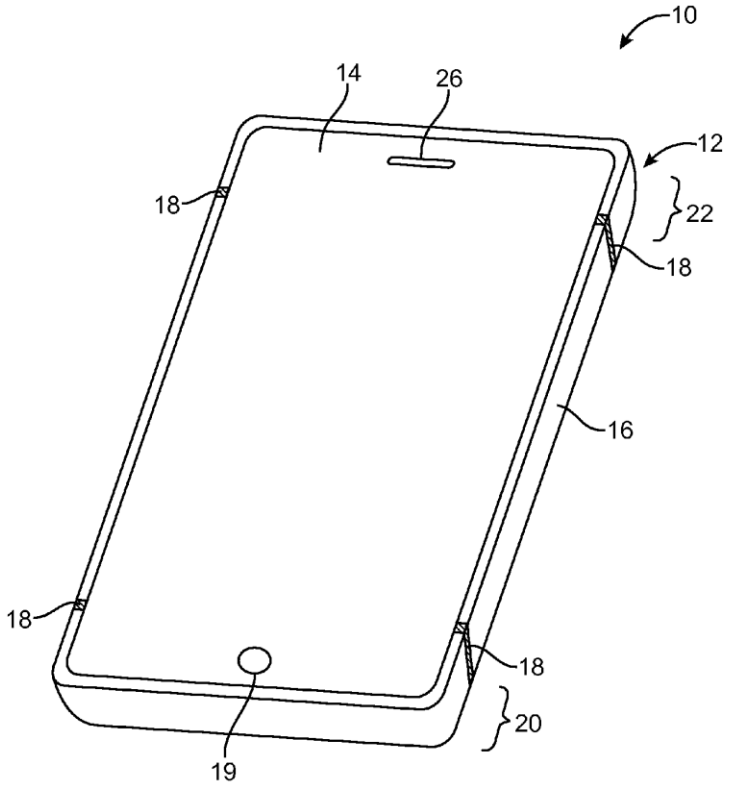

US 20140139388A1

(19) **United States**

(12) **Patent Application Publication**

TANAKA et al.

(10) **Pub. No.: US 2014/0139388 A1**

(43) **Pub. Date: May 22, 2014**

(54) **ANTENNA DEVICE**

(71) Applicant: **MURATA MANUFACTURING CO., LTD.**, Kyoto (JP)

(72) Inventors: **Hiroya TANAKA**, Kyoto (JP); **Kengo ONAKA**, Kyoto (JP)

(73) Assignee: **MURATA MANUFACTURING CO., LTD.**, Kyoto (JP)

(21) Appl. No.: **14/164,054**

(22) Filed: **Jan. 24, 2014**

Related U.S. Application Data

(63) Continuation of application No. PCT/JP2012/068670, filed on Jul. 24, 2012.

(30) **Foreign Application Priority Data**

Jul. 26, 2011 (JP) 2011-163576

Publication Classification

(51) **Int. Cl.**
H01Q 19/00 (2006.01)

(52) **U.S. Cl.**
CPC ***H01Q 19/005*** (2013.01)
USPC **343/833**

(57) **ABSTRACT**

A first radiating element and a second radiating element each have a first extending portion protruding from a region where a ground conductor is formed to a non-ground-conductor region, and a second extending portion extending parallel with a boundary of the ground-conductor region and the non-ground-conductor region. The first radiating element and the second radiating element are arranged such that an open end of the second extending portion of the first radiating element and an open end of a second extending portion of the second radiating element face each other. A parasitic element is formed on a side of the second radiating element distant from the region (where the ground conductor is formed. A parasitic element is formed along the first radiating element. With this configuration, an antenna device is realized which has gain in two frequency bands and has forward directivity.

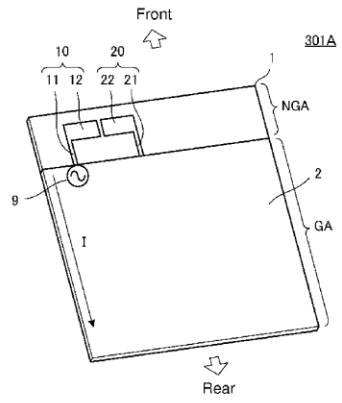

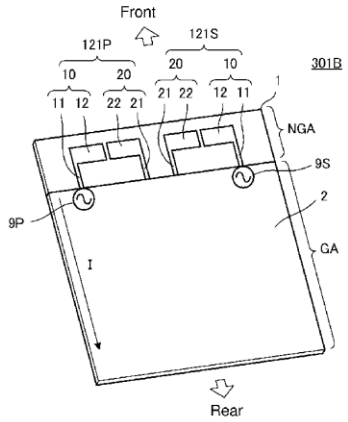

US 20140139391A1

(19) **United States**

(12) **Patent Application Publication**

Lo et al.

(10) **Pub. No.: US 2014/0139391 A1**

(43) **Pub. Date: May 22, 2014**

(54) **ANTENNA SYSTEM WITH HIGH ISOLATION CHARACTERISTICS**

(71) Applicant: **QUANTA COMPUTER INC.**, Kuei Shan Hsiang (TW)

(72) Inventors: **Wen-Yuan Lo**, Kuei Shan Hsiang (TW); **Hui Lin**, Kuei Shan Hsiang (TW); **Chao-Hung Kuo**, Kuei Shan Hsiang (TW); **Jui-Chun Jao**, Kuei Shan Hsiang (TW)

(73) Assignee: **QUANTA COMPUTER INC.**, Kuei Shan Hsiang (TW)

(21) Appl. No.: **13/742,935**

(22) Filed: **Jan. 16, 2013**

(30) **Foreign Application Priority Data**

Nov. 20, 2012 (TW) 101143189

Publication Classification

(51) **Int. Cl.**
H01Q 21/28 (2006.01)

(52) **U.S. Cl.**
CPC ***H01Q 21/28*** (2013.01)
USPC **343/841**

(57) **ABSTRACT**

An antenna system includes a first antenna, a second antenna, a band rejection filter, and a dielectric substrate. The band rejection filter is substantially disposed between the first antenna and the second antenna. The band rejection filter includes a protruded ground element, a main branch, a first extension branch, a first additional branch, and a second additional branch. The main branch substantially has a T-shape. The first extension branch is coupled to the main branch. The first additional branch is separated from the main branch, and a first coupling gap is formed between the first additional branch and the main branch. The second additional branch is separated from the main branch, and a second coupling gap is formed between the second additional branch and the first extension branch. The band rejection filter is configured to improve the isolation between the first antenna and the second antenna.

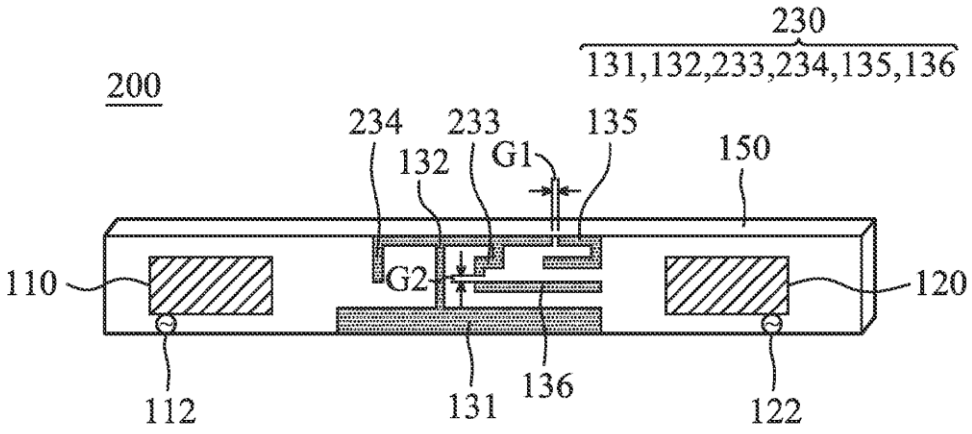

US 20140139392A1

(19) **United States**

(12) **Patent Application Publication**

Wong et al.

(10) **Pub. No.: US 2014/0139392 A1**

(43) **Pub. Date: May 22, 2014**

(54) **COMMUNICATION DEVICE**

(71) Applicant: **ACER INCORPORATED**, New Taipei City (TW)

(72) Inventors: **Kin-Lu Wong**, Kaohsiung City (TW); **Tseng-Wei Weng**, Kaohsiung City (TW)

(73) Assignee: **ACER INCORPORATED**, New Taipei City (TW)

(21) Appl. No.: **13/743,322**

(22) Filed: **Jan. 16, 2013**

(30) **Foreign Application Priority Data**

Nov. 16, 2012 (TW) 101142877

Publication Classification

(51) **Int. Cl.**
H01Q 1/52 (2006.01)

(52) **U.S. Cl.**
CPC ***H01Q 1/523*** (2013.01)
USPC **343/841**

(57) **ABSTRACT**

A communication device including a first antenna, a second antenna, a ground element, and an isolation element is provided. The ground element is coupled to a conductive plane. The isolation element is disposed between the first antenna and the second antenna and includes a first portion and a second portion. A first end of the first portion and a first end of the second portion are respectively coupled to the ground element, and a second end of the first portion is spaced apart a coupling distance from a second end of the second portion.

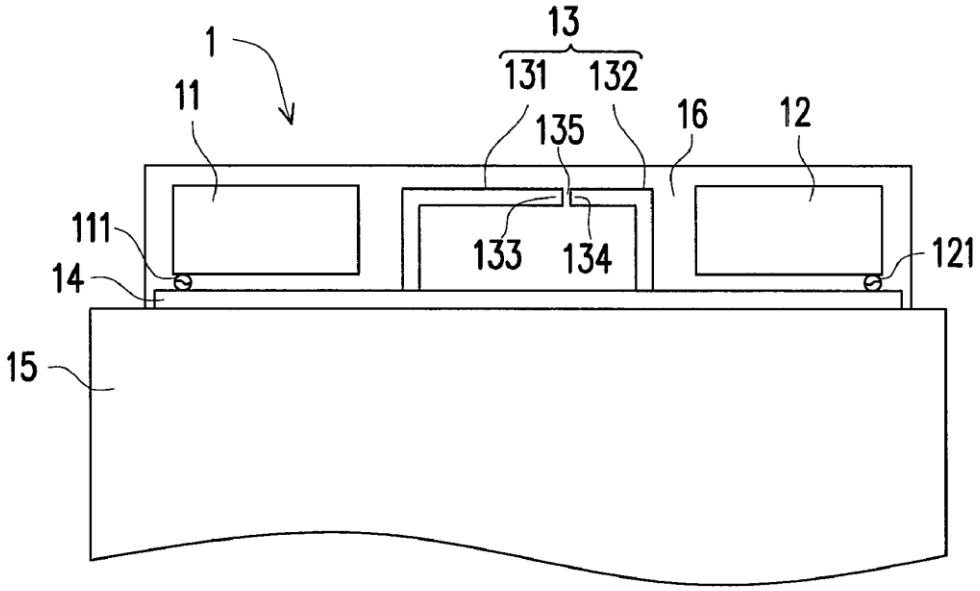

US 20140139396A1

(19) **United States**

(12) **Patent Application Publication**

HUNG et al.

(10) **Pub. No.: US 2014/0139396 A1**

(43) **Pub. Date: May 22, 2014**

(54) **ANTENNA AND ELECTRONIC DEVICE WITH ANTENNA**

(71) Applicant: **HON HAI PRECISION INDUSTRY CO., LTD.**, New Taipei (TW)

(72) Inventors: **CHIH-MING HUNG**, New Taipei (TW); **HAN-PING MI**, New Taipei (TW); **LI-YAN TSAI**, New Taipei (TW)

(21) Appl. No.: **13/787,815**

(22) Filed: **Mar. 7, 2013**

(30) **Foreign Application Priority Data**

Nov. 19, 2012 (TW) 101143038

Publication Classification

(51) **Int. Cl.**

H01Q 9/04 (2006.01)

H01Q 1/42 (2006.01)

(52) **U.S. Cl.**

CPC ... ***H01Q 9/04*** (2013.01); ***H01Q 1/42*** (2013.01)

USPC ..... **343/872**; 343/700 MS

(57) **ABSTRACT**

An antenna includes a dielectric substrate, two pairs of antenna elements engaged on opposite sides of the dielectric substrate, two feed portions and a first connection element. Each antenna elements includes a first antenna electrode and a second antenna electrode connected to the first antenna electrode. A portion of the first antenna electrode is engaged on an upper surface of the dielectric substrate. A portion of the second antenna electrode is engaged on a lower surface of the dielectric substrate. Each of the two feed portions is connected between the ground and a conducive pad formed on the dielectric substrate. The first connection element is connected between the two antenna electrodes. A length of the first connection element is one-fourth wavelength of the first antenna electrode.

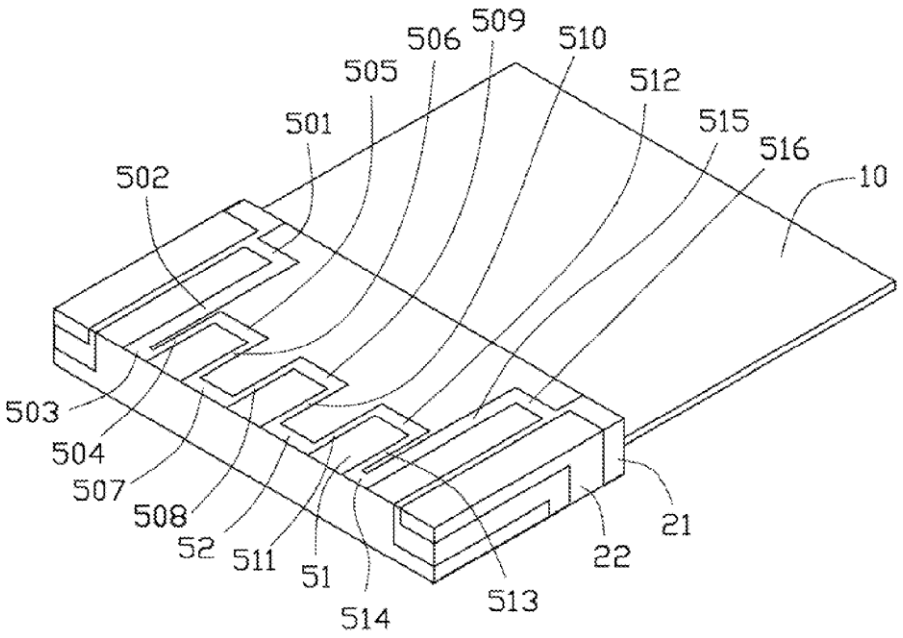

US 20140139399A1

(19) **United States**

(12) **Patent Application Publication**

MIYAKE

(10) **Pub. No.: US 2014/0139399 A1**

(43) **Pub. Date: May 22, 2014**

(54) **MULTI-ANTENNA DEVICE AND COMMUNICATION DEVICE**

(71) Applicant: **Funai Electric Co., Ltd.**, Osaka (JP)

(72) Inventor: **Yasunari MIYAKE**, Osaka (JP)

(73) Assignee: **Funai Electric Co., Ltd.**, Osaka (JP)

(21) Appl. No.: **14/077,755**

(22) Filed: **Nov. 12, 2013**

(30) **Foreign Application Priority Data**

Nov. 20, 2012 (JP) 2012-254225

Publication Classification

(51) **Int. Cl.**
H01Q 1/52 (2006.01)

(52) **U.S. Cl.**
CPC ***H01Q 1/521*** (2013.01)
USPC **343/893**

(57) **ABSTRACT**

A multi-antenna device includes a grounding plate, a first antenna and a second antenna. The first antenna includes a first feed element that is grounded to the grounding plate via a first feed point. The second antenna includes a second feed element that is grounded to the grounding plate via a second feed point. The first feed point and the second feed point are disposed such that a straight line connecting the first feed point and a center of the grounding plate and a straight line connecting the second feed point and the center of the grounding plate are substantially perpendicular to each other in a plan view.

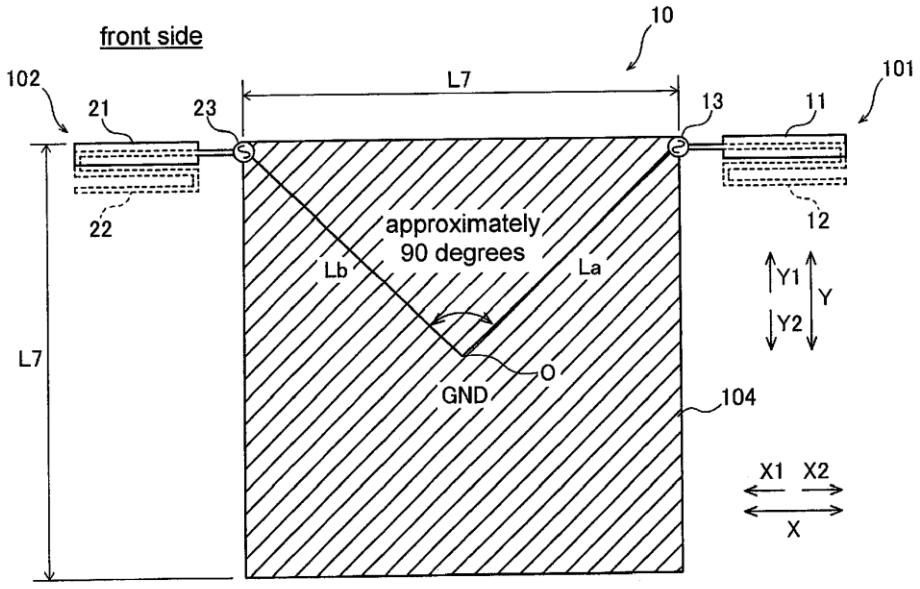

US 20140141731A1

(19) **United States**

(12) **Patent Application Publication**

Abudul-Gaffoor et al.

(10) **Pub. No.: US 2014/0141731 A1**

(43) **Pub. Date: May 22, 2014**

(54) **ANTENNA ARRANGEMENT FOR 3G/4G SVLTE AND MIMO TO ENABLE THIN NARROW BOARDERED DISPLAY PHONES**

(71) Applicant: **MOTOROLA MOBILITY LLC**, Libertyville, IL (US)

(72) Inventors: **Mohammed R. Abudul-Gaffoor**, Palatine, IL (US); **Md Faisal Abedin**, Lindenhurst, IL (US); **Minh H. Duong**, Lake Bluff, IL (US)

(73) Assignee: **MOTOROLA MOBILITY LLC**, Libertyville, IL (US)

(21) Appl. No.: **13/682,765**

(22) Filed: **Nov. 21, 2012**

Publication Classification

(51) **Int. Cl.**

H01Q 21/28	(2006.01)
H04B 1/44	(2006.01)
H01Q 5/00	(2006.01)
H04B 7/04	(2006.01)

(52) **U.S. Cl.**

CPC ***H01Q 21/28*** (2013.01); ***H04B 7/0413*** (2013.01); ***H04B 1/44*** (2013.01); ***H01Q 5/0003*** (2013.01)

USPC **455/78**; 455/278.1; 343/893; 343/728; 343/853

(57) **ABSTRACT**

A method and system provides a multiple input multiple output (MIMO) antenna arrangement in a wireless communication device. A first antenna element and a second antenna element co-located within a same antenna volume are respectively coupled to first and second antenna feeds proximate to a base perimeter segment of a device chassis. The first antenna feed is at a pre-calculated distance from the second antenna feed. The second antenna element, a first MIMO antenna, is coupled to an antenna ground positioned proximate to the first antenna feed and at a pre-determined distance from the second antenna feed. A third antenna element operating as a second MIMO antenna is placed proximate to a top perimeter segment of the device chassis. The antenna arrangement achieves (a) low correlation between the MIMO antennas and (b) an acceptable or pre-determined level of antenna isolation between the first antenna element and the second antenna element.

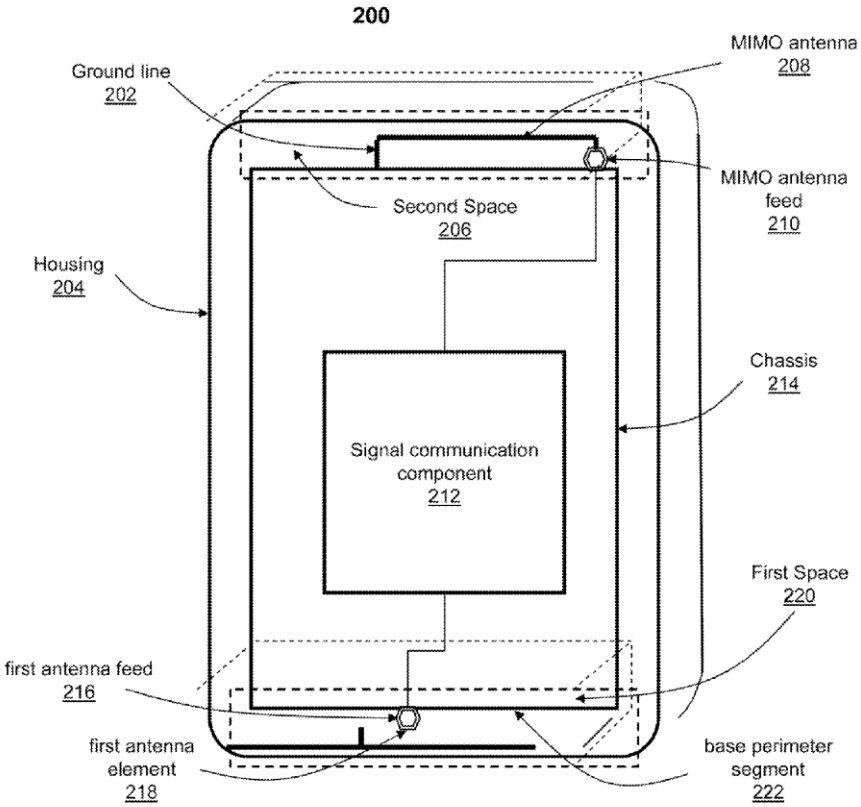

US 20140141733A1

(19) **United States**

(12) **Patent Application Publication**

Wong et al.

(10) **Pub. No.: US 2014/0141733 A1**

(43) **Pub. Date: May 22, 2014**

(54) **ADAPTIVE ANTENNA SELECTION**

(71) Applicants: **Hong Wong**, Portland, OR (US); **Wah Yiu Kwong**, Beaverton, OR (US)

(72) Inventors: **Hong Wong**, Portland, OR (US); **Wah Yiu Kwong**, Beaverton, OR (US)

(21) Appl. No.: **13/679,082**

(22) Filed: **Nov. 16, 2012**

Publication Classification

(51) **Int. Cl.**
H04B 1/38 (2006.01)

(52) **U.S. Cl.**
CPC ***H04B 1/3827*** (2013.01)
USPC **455/90.3**

(57) **ABSTRACT**
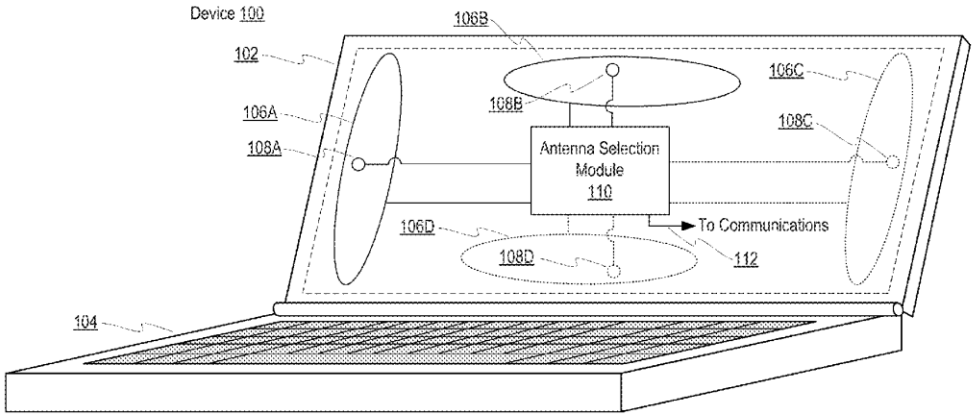
The present disclosure is directed to adaptive antenna selection. In general, devices consistent with the present disclosure may be configured to adapt their antenna configuration to sensed device conditions. In one embodiment, an example device may comprise a communication module, a plurality of antennas, at least one sensor and an antenna selection module. The communication module may be configured to send and receive information via at least wireless communication. The plurality of antennas may be configured to conduct the wireless communication, while the sensors may be configured to sense device conditions. The antenna selection module may be configured to cause at least one antenna in the plurality of antennas to be coupled to the communication module based on the device conditions.